Building Standards

Secondary Suites

Guide for Homeowners

MARKHAM

Table of Contents

Table of Contents 1
Background 3
How To Use This Guide 3
What Is A Secondary Suite? 3
Before Adding a Secondary Suite 4
Zoning 5
Introduction 5
Minimum Setbacks 6
Parking Requirements 7
Ontario Building Code 8
General 8
Fire Separation Requirements 9
Wall / Floor STC Rating 11
Fire Department Access 13
Entrances 13
Exiting and Egress 13
Smoke Alarms 17
Carbon Monoxide Alarms 18
Room Areas 19
Ceiling Height 20
Door Sizes 21
Natural Lighting 22
Spatial Separation 23
HVAC Requirements and Restrictions 23
Thermal Insulation 24
Plumbing Facilities 24
Electrical Facilities and Lighting 25

How to Apply 26
Building Permit Requirements 26
What You Need to Apply for a Building Permit 26
Who Can Prepare the Drawings? 26
Building Inspections 27
Why Inspections Matter 27
When Inspections Happen 27
How to Book an Inspection 27
What Happens During an Inspection 27
Final Approval and Occupancy 27
Helpful Tips 28
Registration 28
Contact Us 29

Disclaimer:

This guide is provided for general information purposes only and may not include all applicable requirements. The City of Markham makes no representations or warranties, express or implied, regarding the accuracy, completeness, or currency of the information contained herein, and assumes no responsibility for any consequences arising from its use. Individuals are responsible for ensuring compliance with all applicable laws, regulations, and municipal requirements, including but not limited to all Markham by-laws and the *Ontario Building Code*. It is strongly recommended that individuals consult with qualified professionals before undertaking any construction activities. Information in this guide is subject to change without notice.

Background

How To Use This Guide

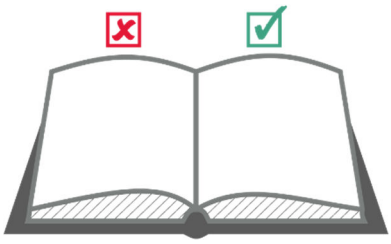

This guide outlines the requirements for adding a secondary suite to a home in the City of Markham. It is based on the 2024 Ontario Building Code (OBC) and City of Markham Zoning By-law 2024-19 . The guide will help you find out if a secondary suite is allowed and how to apply for a permit to build one.

What Is A Secondary Suite?

A secondary suite (also called an "accessory suite", "second suite" or "secondary unit") is an additional residential dwelling unit within a house. According to the OBC a house can only have a total of two dwelling units – this includes the main part of the house and the secondary suite.

The secondary suite can be on the same floor, above, or below the main part of the house. It can also have more than one storey.

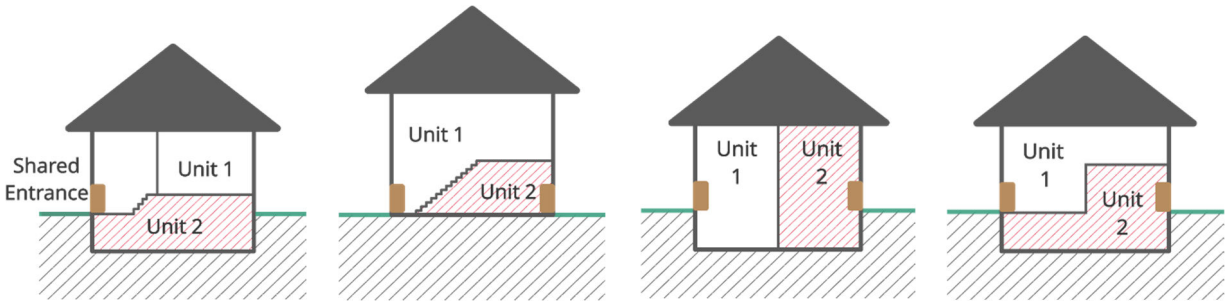

Where a house contains a secondary suite, both dwelling units are registered as part of the same property.

Secondary suites can be added to:

- Detached houses
- Semi-detached houses
- Row townhouses

Before Adding a Secondary Suite

You need to obtain a building permit before adding a secondary suite to your home. It is important to understand the building permit process and the required inspections needed to successfully construct a secondary suite within your existing house. In Markham all secondary suites are required to be registered with Markham Fire & Emergency Services.

Zoning

Introduction

All buildings must comply with the City of Markham's zoning by-laws. Secondary suites are called "additional residential units" or "accessory dwelling units" in our zoning by-laws.

Use the City of Markham's Property Details Search tool to find out the zoning applicable to your property. This free service provides the zone designation, official plan designation, by-law number, and applicable law summary.

This guide provides a summary of the zoning information for properties in By-Law 2024-19. Other zoning requirements may apply to your project.

If your property is not in 2024-19, you can view the applicable zoning by-law at the Development Services Counter at the Civic Centre or submit a Zoning Search.

Minimum Setbacks

Only one dwelling unit entrance is allowed to be located along any main wall facing a street, unless the other dwelling unit entrance is located below-grade to limit the number of doors visible from the street.

If direct access to a secondary suite is provided from the interior side yard of the property, the entrance to the secondary suite is required to be a minimum of 1.2 metres from the interior side lot line.

Stairs accessing the secondary suite are not permitted to be located within 1.2 metres from the interior side lot line.

Additional setback considerations may be required based on your residential zone. Refer to Part 6.0 of By-Law 2024-19 and the respective mapping.

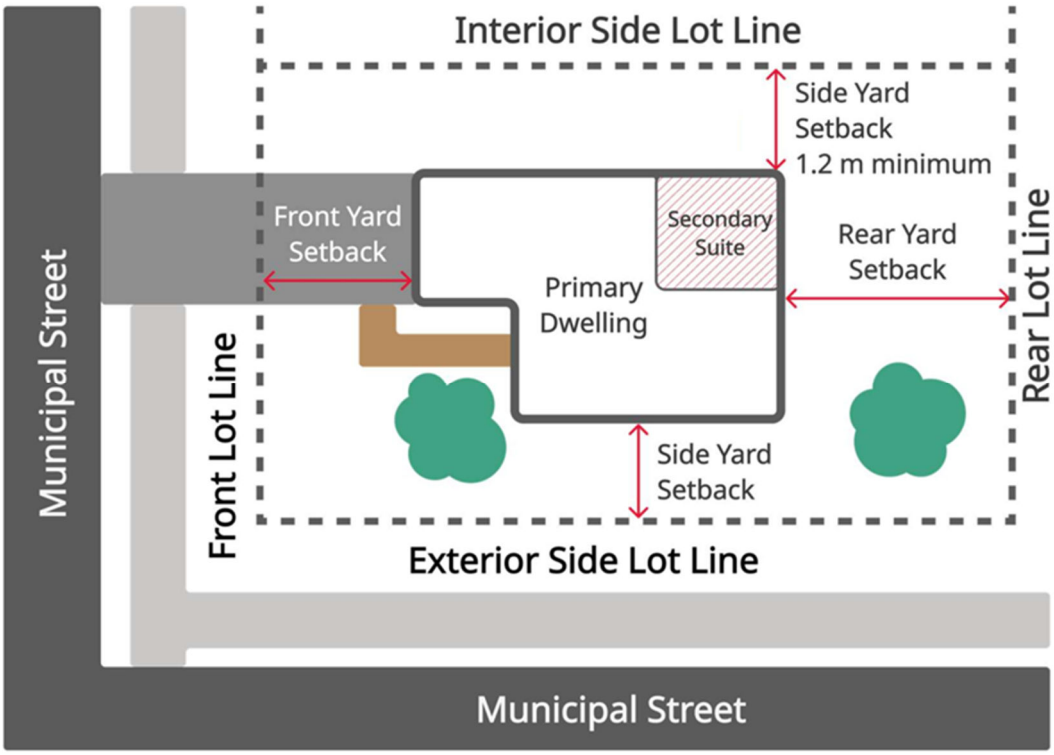

Parking Requirements

The use of public streets, lanes, etc. as a parking space for a secondary suite is not permitted.

Two (2) parking spaces are required for a detached dwelling, semi-detached dwelling, or townhouse dwelling.

A house containing a secondary suite is required to provide one (1) parking space for the main dwelling, and one parking (1) space for secondary suite.

A property containing a coach house or garden home would be required to provide one (1) additional parking space for the coach house or garden home.

Each required parking space is to be a minimum width of 2.75 metres and a minimum length of 5.8 metres.

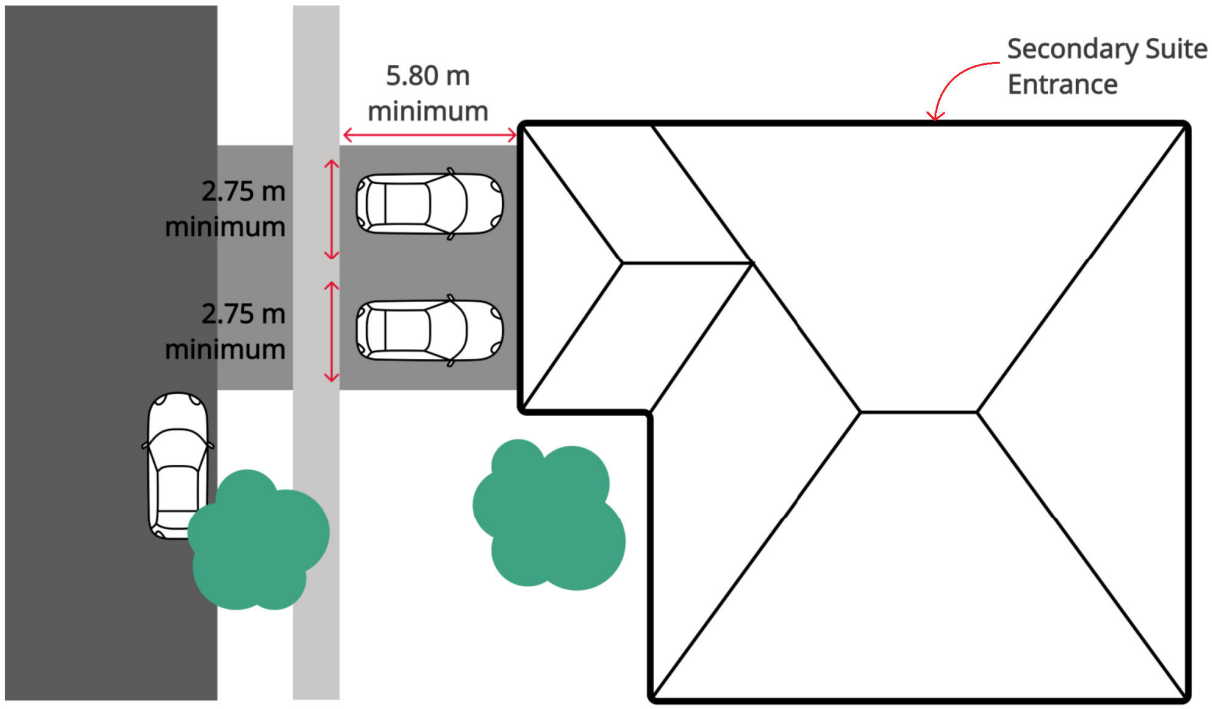

Parking On The Street Is Not Permitted To Count Towards Minimum Parking Numbers

Ontario Building Code

General

The 2024 Ontario Building Code (OBC) sets out minimum technical requirements for the design, construction, and renovation of buildings. The OBC's goal is to keep people safe by setting clear standards for health, fire safety, accessibility, energy use, and more.

It is your responsibility to make sure all rules are followed. Hiring a professional designer who understands the OBC and how the permit process works will help to ensure compliance.

The appropriate OBC requirements depend on how old the home is:

- Homes less than five (5) years old must follow Part 9 of the OBC.
- Homes more than five (5) years old may follow more flexible rules in Part 11 of the OBC.

This guide gives basic information to help you understand the rules for building a secondary suite. However, it does not include all the details. Designers and builders should review the OBC to make sure all requirements are met. A digital copy of the 2024 Ontario Building Code can be requested through the Government of Ontario Website.

Source of Image: 2024 Ontario Building Code. Copyright, King's Printer for Ontario

Fire Separation Requirements

When a house is provided with a secondary suite, a smoke-tight barrier and / or a fire separation is required between the dwelling units

A smoke-tight barrier is a wall, floor or ceiling constructed to stop smoke from moving from one area to another.

A fire separation is a wall, floor, or ceiling constructed to stop fire from spreading. It can have a fire-resistance rating, which tells us how long it can stand up to heat and flames during a fire. Fire separations and smoke-tight barriers must be constructed as a continuous barrier, and where required, be provided with protection when penetrated (e.g., fire dampers, firestopping and door closures).

The following is a high-level summary of the minimum fire separation requirements applicable to secondary suites:

Requirements	< 5 Years Old (Part 9 Requirements)	> 5 Years Old (Part 11 Requirement)
Walls / Floors between Dwelling Units or between Dwelling Units and Common Spaces	A continuous smoke-tight barrier of not less than 15.9 mm thick Type X gypsum board installed on: (a) both sides of walls, and (b) the underside of floor-ceiling framing	30 min fire separation is permitted. 15 min for horizontal fire separation is acceptable if smoke alarms are installed in every dwelling unit and common area, and the smoke alarms are interconnected.
	If the house is provided with sprinkler protection in accordance with the OBC, the above-noted fire-resistance rating is waived	
Shared Egress	45 min fire separation required.	Separated from the remainder of the building and common areas by a 30 minute fire separation. Smoke alarms are installed in

Requirements	< 5 Years Old (Part 9 Requirements)	> 5 Years Old (Part 11 Requirement)
		every dwelling unit and common area, and the smoke alarms are interconnected
Loadbearing Assemblies (e.g., columns, beams, loadbearing walls, and arches, etc.)	Light-frame walls, columns, arches and beams as well as loadbearing steel elements that support floors between dwelling units shall be protected by not less than 15.9 mm thick Type-X gypsum board.	Fire-resistance rating of not less than that required for the supported floor or roof assembly. If the house is provided with sprinkler protection in accordance with the OBC, the fire-resistance rating is waived.
Doors within a Shared Means of Egress	20-minute fire-protection rating with self-closing devices (1)	Existing unlabeled doors at least 45 mm solid core wood or metal clad are acceptable with a self- closing device For existing closures, a fire-protection rating is not required where the entire floor area is sprinklered
Doors between dwelling units	45 mm solid core wood or metal clad are acceptable with a self- closing device For existing closures, a fire-protection rating is not required where the entire floor area is sprinklered	

(1) Specific solid core wood doors may qualify as achieving the required fire-protection rating for a closure.

Where an existing party wall is provided to separate semi-detached and townhouse units, the existing fire separation of these party walls must be maintained.

Additional fire separation requirements may apply subject to HVAC arrangements.

Wall / Floor STC Rating

Airborne sound is transmitted between dwelling units directly through the separating wall, floor and ceiling assemblies.

Sound Transmission Class (STC) describes the sound isolation performance of an assembly separating two spaces along a direct transmission path.

Apparent Sound Transmission Class (ASTC) describes the sound isolation performance of an assembly separating two spaces along direct and flanking (bordering) transmission paths.

The higher the STC / ASTC rating, the better the sound isolation.

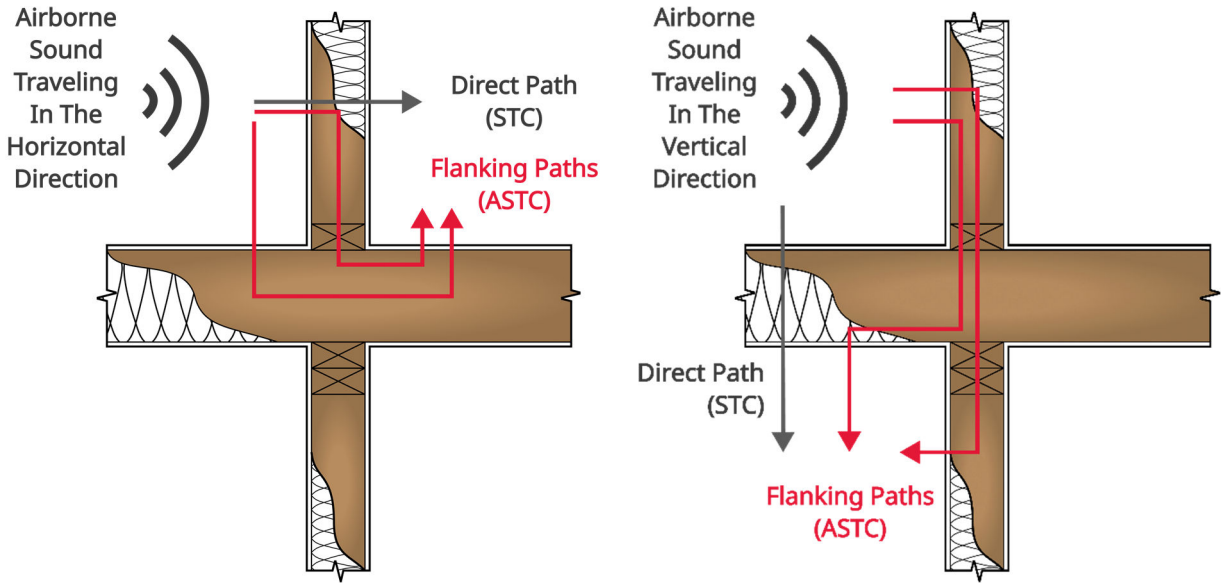

Dwelling units are required to be protected from airborne noise with the following:

< 5 Years Old Building (Part 9 Requirements)	> 5 Years Old Building (Part 11 Requirements)
Meet **one** of the following options: • ASTC rating not less than 47 • STC rating not less than 50 (1)	Meet **one** of the following options: • ASTC rating of not less than 40 • STC rating of not less than 43 • Meet construction requirements of Part 11 (C181) (2)

(1) The demising assembly required to meet the requirements for separation of residential suites (refer to Fire Separation section of this guide) can be designed to achieve the STC requirements noted above.

(2) STC and ASTC rating can be waived if construction of the following is provided:

- whose joist spaces are filled with sound-absorbing material of not less than 150 mm nominal thickness,
- whose stud spaces are filled with sound-absorbing material,
- having a resilient channel on one side of the separation spaced 400 or 600 mm o.c., and
- having not less than 12.7 mm thick gypsum board on ceilings and on both sides of walls.

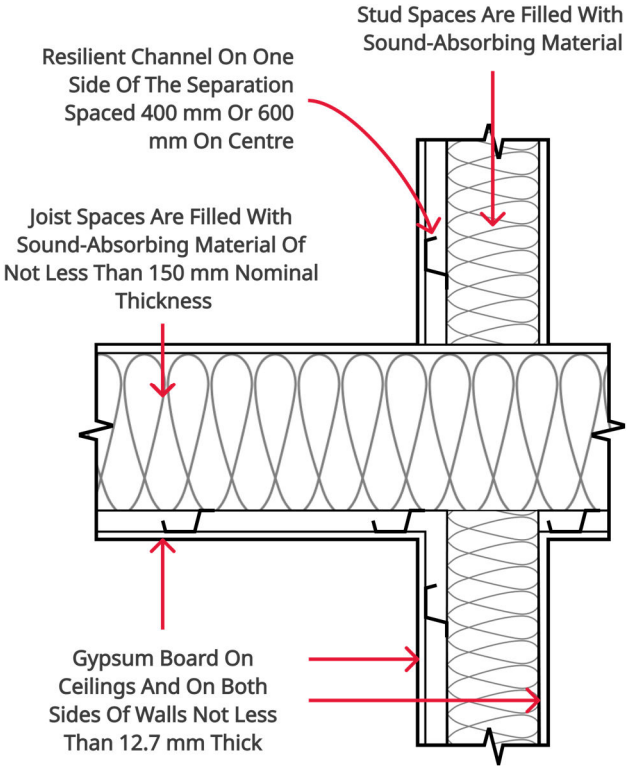

Fire Department Access

The fire department is required to be able to access each dwelling unit in the event of a fire emergency. Where a dwelling unit is cut off (inaccessible) from the front entrance to the building, direct access must be provided to the unit entrance.

In general, the following design measures are considered acceptable:

- ☐ Minimum 1.2 m unobstructed path from street to primary entrance of the dwelling unit
- ☐ Total path of travel from hydrant to fire truck to dwelling unit entrance does not exceed 90 m
- ☐ Path of travel from fire truck to dwelling unit entrances does not exceed 45 m

Entrances

Main entrance doors to dwelling units are required to be provided with a door viewer or transparent glazing in the door or sidelight.

Exiting and Egress

General

All secondary suites are required to be provided with sufficient and safe access to exits.

A secondary suite is required to be provided with exit or egress doors such that it is not necessary to travel up or down more than 1 storey to reach a level with:

- an egress door in a public corridor, enclosed exit stair or exterior passageway, or
- an exit doorway not more than 1.5 m above adjacent ground level.

This is typically achieved via a basement walkout, exterior exit door or shared means of egress. It is envisioned that travel distance not to exceed 1 storey.

Shared egress facility conditions may require additional egress measures.

Egress pathways are not permitted to go through another dwelling unit, service room or other occupancy.

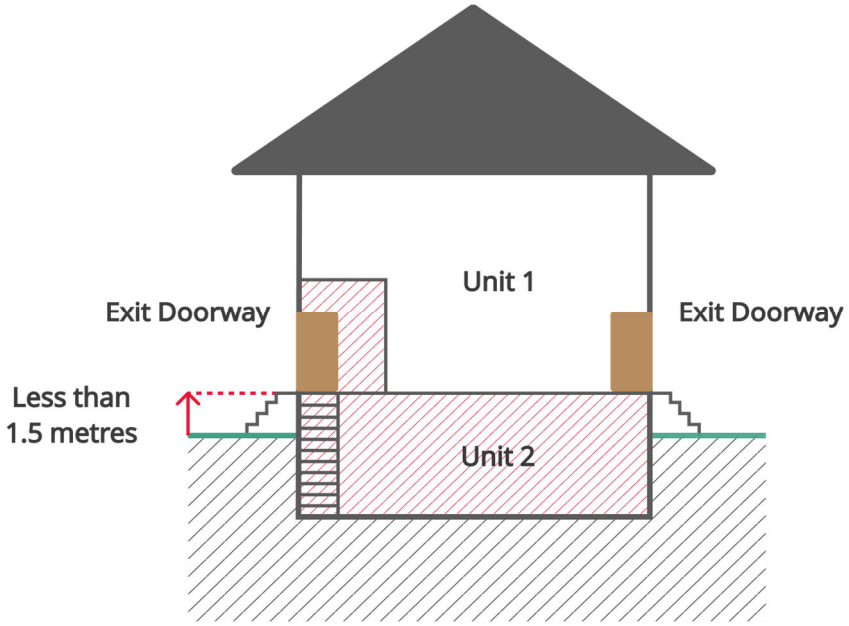

For houses greater than five (5) years old, additional options for exiting may apply.

Egress Windows

Egressing from bedrooms is important in the event that a fire prevents access to an exit.

Except where a door on the same floor level as the bedroom provides direct access to the exterior, every floor level containing a bedroom is required to be provided with at least one outside window that:

- ☐ is openable from the inside without the use of tools,
- ☐ provides a minimum individual unobstructed opening area of 0.35 m^2 with no dimension less than 380 mm, and
- ☐ maintains the required opening as noted above without the need for additional support.

If the bedroom is not located in the basement, the window is to be located with a maximum sill height of 1 000 mm above the floor. For windows in basement, it is recommended that the window be located not more than 1 500 mm above the floor.

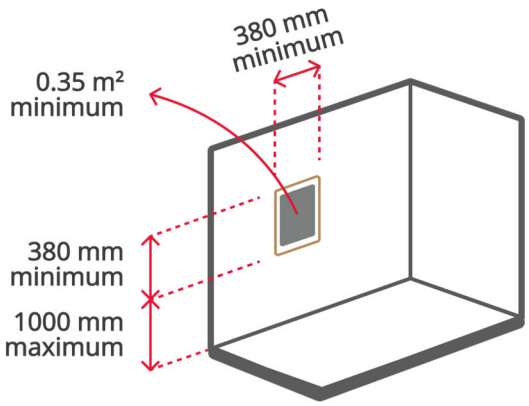

Bedroom Window Requirements Above-Grade

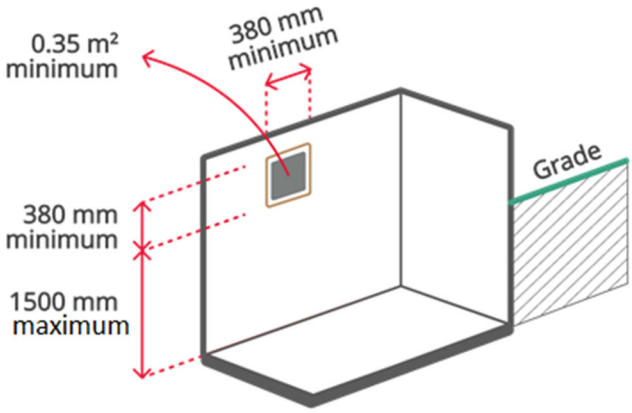

Bedroom Window Requirements In Basement

If the window is located in a window well, a clearance of 550 mm is required to be provided in front of the window (including if the door opens outwards).

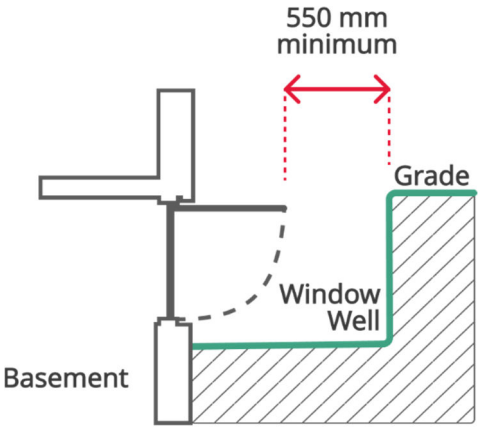

Basement Window Swinging Outwards

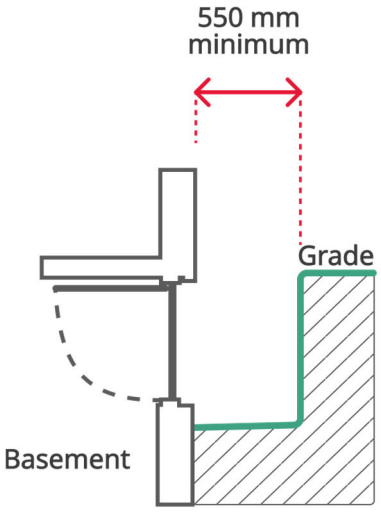

Basement Window Swinging Inwards

When a house with a secondary suite is greater than five (5) years old, additional options may be considered.

Protection of Exits

In some houses, the only way out (leading to the street) might be an exterior stair or ramp, like a basement walkout. If there are windows or other openings from the other dwelling unit nearby, a fire condition in the other dwelling unit could impact the stair or ramp, so those windows or openings need special consideration to help keep people safe when they are trying to get out.

Protection is required if:

- the openings are within 3 metres horizontally, and
- they are located less than 10 metres below or less than 5 metres above the stair or ramp.

Acceptable protection of these openings includes for:

- listed closures,
- wired glass in fixed steel frames, or
- glass block.

Other exposure conditions may require additional protection.

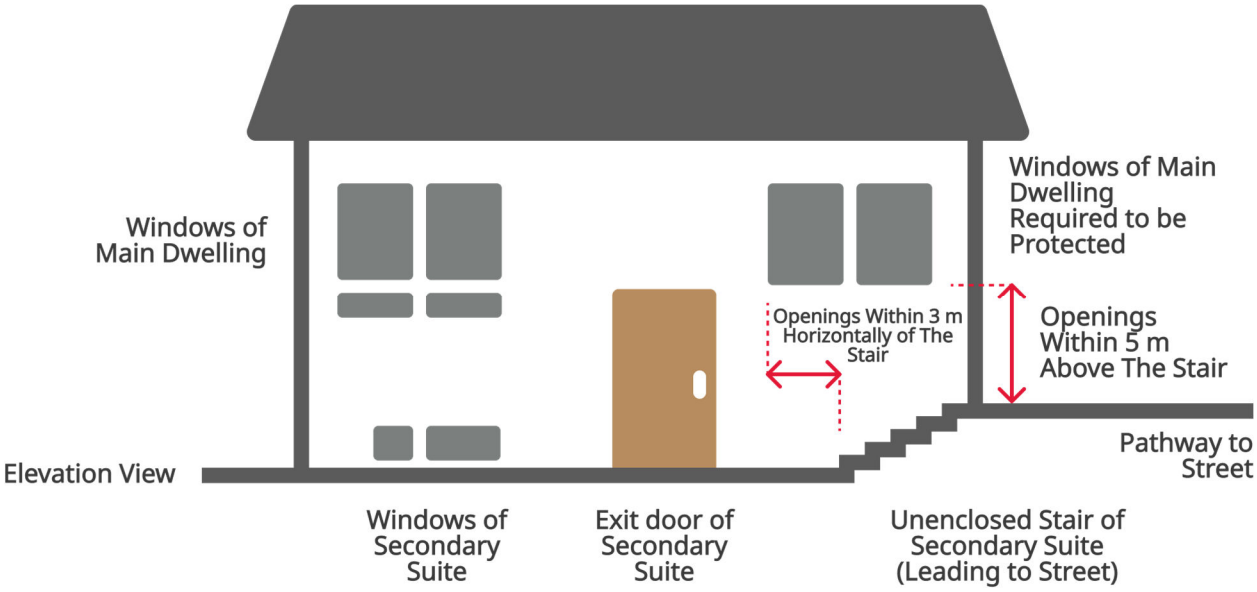

Smoke Alarms

Smoke alarms provide early detection and warning of fires. The two highest causes of fire deaths in homes are from fires starting in the kitchen and bedrooms. Most fatal fires occur while people are sleeping. It is important to provide working smoke alarms to allow enough time to react and escape. The required locations and smoke alarm requirements are listed below.

Locations Requiring Smoke Alarms	• On every storey (including basements)
	• In each sleeping room
	• Outside each sleeping room – if the sleeping rooms are served by a hallway, the smoke alarm is to be located in the hallway
	• In service / storage spaces, common spaces, and shared means of egress between dwelling units
Smoke Alarms Requirements	• Interconnected (hard-wired or wirelessly) so that the activation of any one smoke alarm causes all smoke alarms within the house with a secondary suite to sound
	• Provided with a visual signalling component
	• Connected to an electrical circuit with battery back-up if the building is provided with electrical power. • Houses older than five (5) years are permitted to have battery operated smoke alarms.

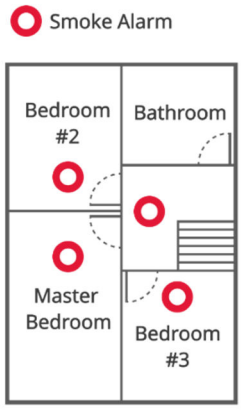

Case 1

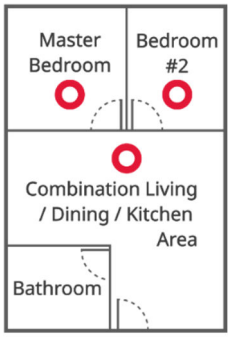

Case 2

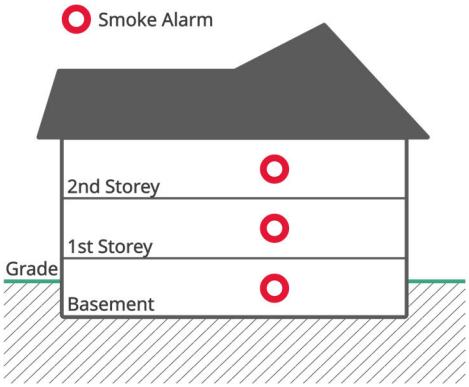

Carbon Monoxide Alarms

Carbon monoxide (CO) is a colourless, odourless gas. It can build up in an enclosed space and become dangerous without people knowing. CO can come from things like gas stoves, gas furnaces or attached garages. It is important to have carbon monoxide alarms to help detect the gas if it is present.

Locations Requiring Carbon Monoxide Alarms	• Adjacent to each sleeping room
	• In a combined sleeping and living area

	• Within each sleeping room that:
	  ○ contains a fuel burning appliance, or
	  ○ shares a common wall, floor or ceiling assembly with:
	  ▪ a room, suite or area that is outside the suite and contains a fuel-burning appliance or flue
	  ▪ a storage garage, or
	  ▪ an attic or crawl space that is adjacent to a storage garage

	• On each floor of the dwelling unit without a sleeping room
	• In the corridor that serves multiple dwelling units where the corridor is directly heated by a forced-air fuel burning appliance
	• In the furnace room that is not within a dwelling unit.
	• In a shared laundry room with laundry drying equipment
Carbon Monoxide Alarm Requirements	• Wired so that the activation of one CO alarm will activate the remaining CO alarms within the house with a secondary suite (including common spaces)
	• Provided with a visual signalling component
	• Connected to an electrical circuit with battery back-up if the building is provided with electrical power (if the building is provided with electrical power) • Houses older than five (5) years are permitted to have CO alarms that are battery operated or plugged into the electrical outlet

Room Areas

Rooms in a dwelling unit must have the following minimum areas (OBC, Section 9.5):

Room / Space	Minimum Area (m^2) (1) (2)
Living area	13.5
Living area where combined with a kitchen and dining area (in a dwelling unit with sleeping accommodation for not more than two persons)	11.0
Dining Room	7.0
Dining Room (if combined with other spaces)	3.25
Kitchen Area	4.2
Kitchen Area (in a dwelling unit with sleeping accommodation for not more than two persons)	3.7
Primary Bedroom (with built-in closet)	8.8
Primary Bedroom (without built-in closet)	9.8
Secondary Bedrooms (with built-in closet)	6.0
Secondary Bedrooms (without built-in closet)	7.0
Living room, dining, kitchen and bedroom spaces combined (studio / bachelor type suite in a dwelling unit with sleeping accommodation for not more than two persons)	13.5
Bathroom	(3)
Hallways	860 mm wide

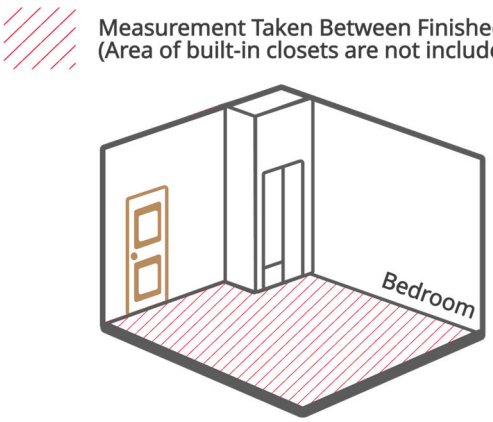

(1) Room areas are measured between wall surfaces.
(2) The noted areas exclude washrooms and laundry areas.
(3) The bathroom area must be sufficient for the required fixtures. In general, an area of 3 m^2 maintaining a 610 mm access to the water closet, lavatory, and bathtub / shower stall is adequate.

Ceiling Height

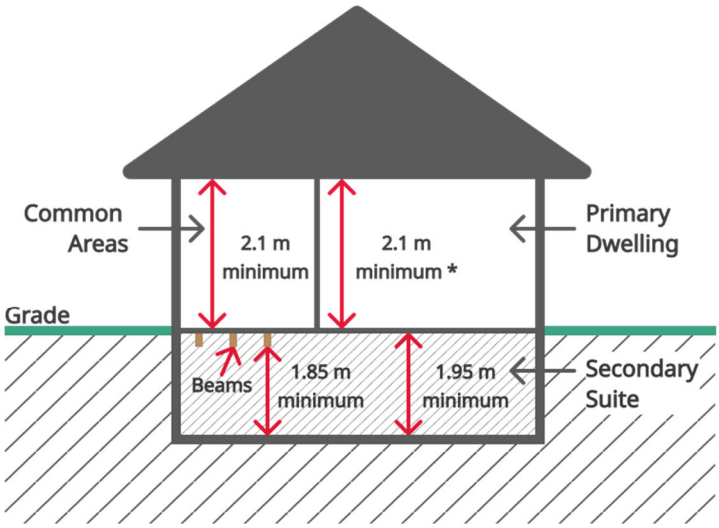

* See OBC Article 9.5.3.1

All buildings and rooms must have high enough ceilings to make sure people can leave safely in an emergency.

The table below lists the minimum ceiling heights needed for secondary suites.

Location	Part 9 Requirements
General Areas within secondary suite (1)	1.95 m
Under beams and ducting (1)	1.85 m
Common Areas	2.10 m

(1) Includes for ceiling heights over stairs.

Door Sizes

Doors in dwelling units must have the minimum sizes shown in the table below:

Door Size	Minimum Width (mm)	Minimum Height (mm) (1)
Dwelling unit entrance (including common spaces), vestibule or entrance hall	810	1 980
Stair to a floor level that contains a finished space	810	1 980
All doors in at least one line of passage from the exterior to the basement	810	1 980
Utility Rooms	810	1 980
Walk-in Closet	810	1 980
Bathroom, water-closet room, shower room	610	1 980
Rooms located off hallways that are permitted to be 710 mm wide	610	1 980
Rooms not mentioned above, and exterior balconies	760	1 980

(1) A minimum doorway height of 1 890 mm is permitted for doors within a secondary suite to accommodate the ceiling heights of 1 950 mm for secondary suites.

Natural Lighting

Some types of rooms need natural light and a view to the outdoors. The OBC requires minimum window glass areas in the rooms listed below.

Room / Space	< 5 Years Old (Part 9 Requirements)		> 5 Years Old (Part 11 Requirement)
	Minimum Unobstructed Glass Area with No Electric Lighting	Minimum Unobstructed Glass Area with Electric Lighting	
Laundry, basement recreation room, unfinished basement	4% of area served	Windows not required	(1)
Water-closet room	0.37 m^2	Windows not required	(1)
Kitchen (including kitchen space, and alcove)	10% of area served	Windows not required	(1)
Living rooms and dining rooms	10% of area served		(1)
Bedrooms and other finished rooms not mentioned above	5% of area served (1)		(1)

(1) Where windows are not used as a means and egress and do not conflict with ventilation requirements, the minimum glasses areas provided in Part 9 (as noted in the table) can be reduced by 50%.

(2) Refer to Exiting and Egress Section of this guide for additional window area requirements.

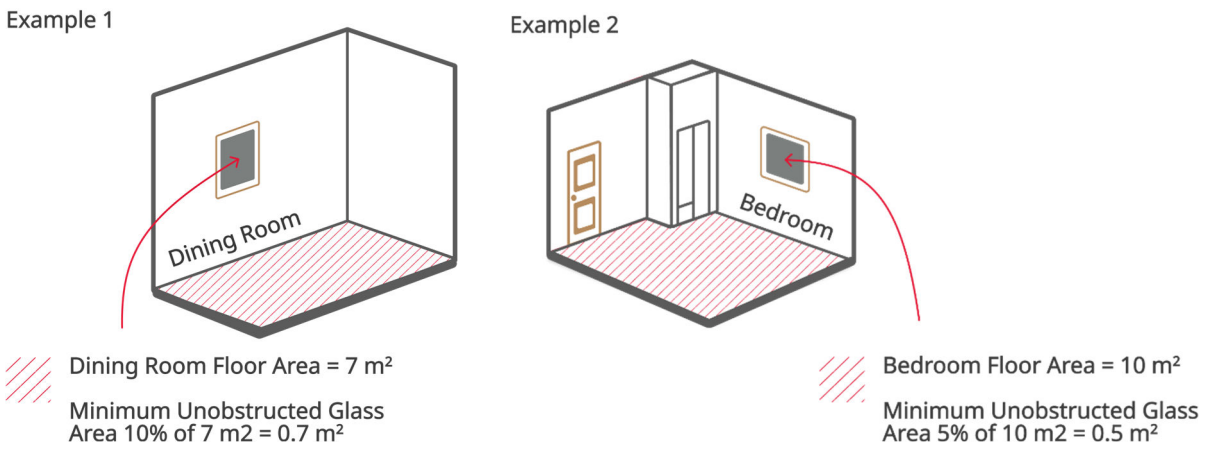

Spatial Separation

The OBC has rules for spatial separation and limiting distance. This helps stop fires from spreading beyond the building of origin. The closer buildings are to a property line or another building on the same property, the fewer windows or doors are allowed on that side.

For houses with a secondary suite, the rules about how much space is needed are found in Subsection 9.10.15 of the OBC.

HVAC Requirements and Restrictions

Heating and air conditioning systems are not permitted to serve multiple dwelling units. Each dwelling unit is required to be provided with its own heating system.

Required heating facilities are required to be capable of maintaining an indoor air temperature of not less than:

a) 22 °C in all living spaces,
b) 18 °C in unfinished basements,
c) 18 °C in common service rooms, ancillary spaces and exits in houses with a secondary suite and
d) 15 °C in heated crawl spaces.

Air duct distribution systems serving one of the dwelling units in a house with a secondary suite are not permitted to be directly interconnected with other parts of the house.

For houses greater than five (5) years old, the existing heating or air-conditioning system can be altered to serve more than one dwelling unit provided that:

- smoke alarms are installed in each dwelling unit,
- a smoke detector is installed in the air duct system serving the entire building, and
- activation of the smoke detector will cause the fuel supply and electrical power to the heating system to turn off.

Thermal Insulation

All walls, ceilings and floor separating a heated space from an unheated space (e.g., between the secondary suite and the detached parking garage), exterior air or exterior soil, is required to be provided with thermal insulation to prevent moisture condensation and improve occupant comfort.

The Building Code outlines minimum energy efficiency requirements for the building in Supplementary Standard SB-12. This requirement is applicable where the secondary suite is proposed as an addition to the existing building. Otherwise, the secondary suite is required to meet or exceed the thermal insulation requirements of the existing building.

The insulation provided in fire-rated assemblies should be noncombustible mineral wool.

Plumbing Facilities

OBC Section 9.31 outlines requirements for plumbing facilities within dwelling units. Each dwelling unit must have:

- Kitchen sink
- Lavatory
- Bathtub / shower
- Water closet, and
- Laundry facilities.

The laundry facilities can be in a shared space accessible to occupants of both dwelling units.

A secondary suite is required to have its own shut-off valve, such that when the water supply to one dwelling unit is shut off, it would not interrupt the water supply to the remainder of the building.

If your property is in a flood prone zone you will need to provide backwater valves for each dwelling unit. For more information, see Builder Tip No. 108 available at markham.ca/building.

Installation of plumbing facilities and compliance with the OBC will need to be conducted by a qualified plumber.

Most properties in Markham have municipal services. If your property has a septic system, it may need upgrades for the secondary suite.

Electrical Facilities and Lighting

Every entrance is required to be provided with exterior lighting outlet with fixture controlled by a wall switch located within the building.

The OBC requires that a lighting outlet with a fixture controlled by wall switches be provided in kitchens, bedrooms, living rooms, utility rooms, laundry rooms, dining rooms, bathrooms, vestibules, storage rooms, and hallways.

Stairways with more than 4 risers are required to be lighted with 3-way wall switches located at the top and bottom of the stair.

The Ontario Electrical Safety Code has further requirements when adding a secondary suite. Electrical service to and into the house is to be sized to accommodate the secondary suite.

How to Apply

Building Permit Requirements

The creation of a secondary suite must follow the rules in the Ontario Building Code and needs a building permit. After construction is complete, the secondary suite is required to be registered with the Markham Fire and Emergency Services. These requirements are intended to make sure it is safe, legal and livable.

What You Need to Apply for a Building Permit

You must apply online at eplanportal.markham.ca/. What you need to submit depends on where the house is located, the type of services on the lot, and whether the home is new or being renovated. There are four main parts to every building permit application:

1. Application Forms
2. Documents
3. Construction drawings
4. Permit Fees

A comprehensive list of the required drawings, documents and forms can be found online at markham.ca/economic-development-business/building-permits/guide-building-permits

Who Can Prepare the Drawings?

Drawings for the permit can be made by:

- A registered designer with a Building Code Identification Number (BCIN) qualified in House or Small Buildings
- A licensed Architect
- A Professional Engineer
- The homeowner, provided that they understand and are willing to take responsibility for the requirements of the Ontario Building Code.

Building Inspections

Why Inspections Matter

Inspections make sure your project follows the Ontario Building Code and the City of Markham's by-laws. This keeps people safe and protects your home's value.

When Inspections Happen

Here are the main times that inspections are needed:

- **Footings/Foundation** (if applicable): Required for new foundations or basement walkouts.
- **Framing**: After the structure is built but before insulation or drywall.
- **Plumbing and Mechanical Rough-In**: Before the pipes and systems are covered up.
- **Insulation and Vapour Barrier**: After insulation is added but before drywall.
- **Fire Separations and Fire Stopping** (if applicable): To check fire-rated walls and ceilings and the sealing around penetrations.
- **Occupancy/Completion**: When the work is finished and the unit is ready for occupancy.

How to Book an Inspection

Book inspections at least 24 hours ahead using via the **ePLAN portal**. You will need your Building Permit Number, site address and inspection details.

What Happens During an Inspection

If the work complies, the Building Inspector will approve the stage and you can move to the next step. If corrections are needed, the inspector will issue a Field Inspection Report. You must make the corrections and get it re-inspected before moving on.

Final Approval and Occupancy

After passing the Occupancy/Completion Inspection, your project is approved and your building permit is closed.

Helpful Tips

- Keep your Building Permit and approved plans on-site for inspections.
- Coordinate with your contractor to ensure inspections are ready.
- Keep copies of all inspection reports.

For more details about secondary suites and the inspection process, please contact Building Standards – Inspection Services at 905.475.4858 extension 2189.

Registration

All secondary suites must be registered with Markham Fire and Emergency Services. This means both the secondary unit and the rest of the home must be checked by Fire and Emergency Services staff. There is a fee for this inspection and registration.

To register, you must allow the inspectors to see all parts of the home and provide the following:

- Proof of home insurance that covers two units
- A general electrical inspection report
- Smoke and carbon monoxide (CO) alarms on every level — they must not be expired, must be in the correct locations, and must have the correct power source
- A check of the kitchen stove and dryer exhaust ducts to make sure they use semi-rigid or smooth metal connections
- A check of the wall and door between the garage and the house — the door must close by itself and latch properly

After you provide all the documents and fix any problems found during the inspection, Markham Fire and Emergency Services will give you a letter to show your unit is registered.

For more information, contact:

Markham Fire & Emergency Services
905.415.7521
Fire-PreventionChiefs@markham.ca

Contact Us

Additional Residential Units

This guide was produced by the City of Markham. If you have any questions or comments, please contact us at BuildingARUs@markham.ca

Permit Application Status

Building Permit Administration
905.475.4870
buildingstandards@markham.ca

Building Inspections

Building Inspections
905.475.4858 extension 2189
bins@markham.ca

Registration

Markham Fire & Emergency Services
905.415.7521
Fire-PreventionChiefs@markham.ca