Building Standards

Coach Houses and Garden Homes

Guide for Homeowners

MARKHAM

Table of Contents

Table of Contents 1
Background 4
How To Use This Guide 4
What Are Coach Houses And Garden Homes? 4
Before Adding a Coach House or Garden Home 5
Zoning 6
Introduction 6
Coach House Site Requirements 7
Garden Home Site Requirements 8
Parking Requirements 9
Ontario Building Code 11
General 11
Fire Separation Requirements 12
Wall / Floor STC Rating 13
Fire Department Access 14
Entrances 14
Exiting and Egress 15
Smoke Alarms 18
Carbon Monoxide Alarms 19
Room Areas 20
Ceiling Height 21
Door Sizes 22
Natural Lighting 23
Spatial Separation 24
Thermal Insulation 25
HVAC Requirements and Restrictions 25
Plumbing Facilities 25

Electrical Facilities and Lighting....26
How to Apply....27
Building Permit Requirements....27
What You Need to Apply for a Building Permit....27
Who Can Prepare the Drawings?....27
Building Inspections....28
Why Inspections Matter....28
When Inspections Happen....28
How to Book an Inspection....28
What Happens During an Inspection....28
Final Approval and Occupancy....29
Helpful Tips....29
Registration....30
Contact Us....31

Disclaimer:

This guide is provided for general information purposes only and may not include all applicable requirements. The City of Markham makes no representations or warranties, express or implied, regarding the accuracy, completeness, or currency of the information contained herein, and assumes no responsibility for any consequences arising from its use. Individuals are responsible for ensuring compliance with all applicable laws, regulations, and municipal requirements, including but not limited to all Markham by-laws and the *Ontario Building Code*. It is strongly recommended that individuals consult with qualified professionals before undertaking any construction activities. Information in this guide is subject to change without notice.

Background

How To Use This Guide

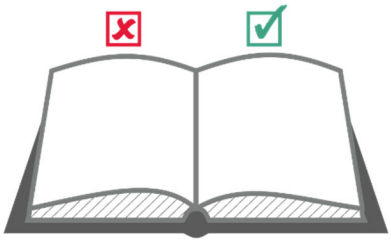

This guide outlines the requirements for adding a coach house or garden home to a residential property in the City of Markham. It is based on the 2024 Ontario Building Code (OBC) and City of Markham Zoning By-law 2024-19. The guide will help you find out if a coach house or garden home on your property is allowed and how to apply for a permit to build one.

What Are Coach Houses And Garden Homes?

General

Coach houses and garden homes are both considered accessory suites to a house on a property.

A property is **not** permitted to have both a coach house and garden home**.**

Coach Houses

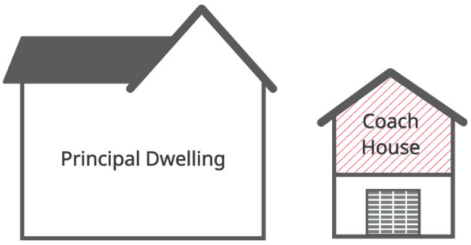

A coach house is a dwelling unit where the majority of the unit is located above a detached garage located in the rear yard of a property that is accessed by a lane.

Garden Homes

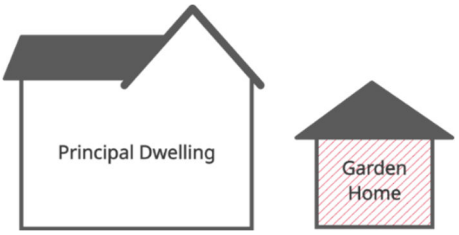

A garden home is a dwelling unit located in an accessory building that is in the rear yard of property that is not accessed by a lane.

Before Adding a Coach House or Garden Home

You need to obtain a building permit before building a coach house or garden home on your property. It is important to understand the building permit process and the required inspections needed to successfully construct a coach house or garden home. In Markham, all coach houses and garden homes are required to be registered with Markham Fire and Emergency Services.

Zoning

Introduction

All buildings must comply with the City of Markham's zoning by-laws. Coach houses and garden homes are defined terms in our zoning by-laws.

Use the City of Markham's Property Details Search tool to find out the zoning applicable to your property. This free service provides the zone designation, official plan designation, by-law number, and applicable law summary.

This guide provides a summary of the zoning information for properties in By-law 2024-19. Other zoning requirements may apply to your project.

If your property is not in 2024-19, you can view the applicable zoning by-law at the Development Services Counter at the Civic Centre or submit a Zoning Search.

Coach houses and garden homes have different standards under By-law 2024-19.

Coach House Site Requirements

Setbacks [1]	Required to be located in the rear yard at a minimum of: ☐ 4.0 metres from the main building on the lot, ☐ 1.2 metres from the interior side lot line and rear lot line which can be reduced to 0.5 metres if the lot area is less than 4,000 m^2 and there are no doors or windows on the wall facing the lot line, and ☐ the required exterior side yard setback for the main building (as determined by Part 6.0 of By-law 2024-19) from the exterior side lot line.
Maximum Area	Maximum permitted lot coverage the greater of: i) 15 percent, or ii) 1) 40 m^2 if the lot area is less than 4,000 m^2; 2) 60 m^2 if the lot area is 4,000 m^2 or greater.
Maximum Height	Maximum height of a building with a coach house is 8.0 metres. Minimum number of storeys is two (2).
Access Requirements	Required to be accessed by a lane.

[1] Additional setback considerations may be required based on your residential zone. Refer to Part 6.0 of By-law 2024-19 and the respective mapping.

Setback Requirements of a Coach House

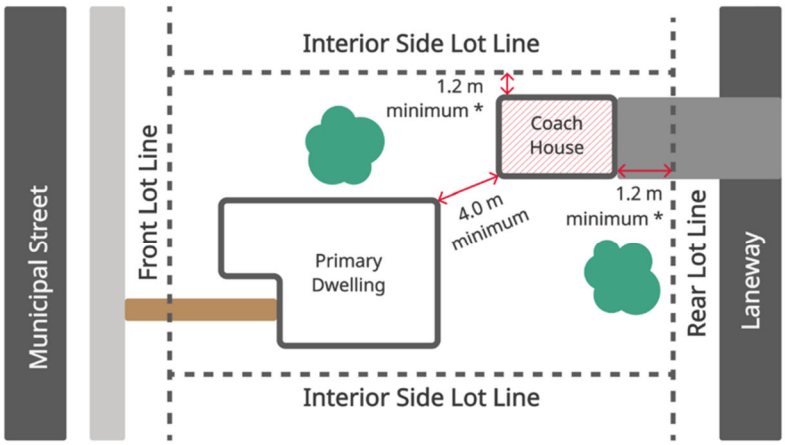

* Distance from the Coach House to the interior side or rear lot line can be reduced to 0.5 metres if the lot area is less than 4,000 square metres and there are no windows or doors on the wall facing the lot line.

Garden Home Site Requirements

Setbacks [1]	Required to be located in the rear yard at a minimum of: ☐ 4.0 metres from the main building on the lot, ☐ 1.2 metres from the interior side lot line and rear lot line, which can be reduced to 0.5 metres if the lot area is less than 4,000 m^2 and there are no doors or windows on the wall facing the lot line. ☐ the required exterior side yard for the main building from the exterior side lot line (as determined by the zone the property is located in. Refer to Part 6.0, Part 7.0, Part 10.0, or Part 12.0 of By-law 2024-19),
Maximum Area [2]	Maximum permitted gross floor area above average grade is: ☐ 15 m^2 if the lot area is less than or equal to 500 m^2 ☐ 60 m^2 if the lot area is greater than 500 m^2.
Maximum Height	Maximum height of a garden home is: ☐ 4.0 metres if the lot area is less than or equal to 4,000 m^2 ☐ 5.5 metres if the lot area is greater than 4,000 m^2.

(1) Additional setback considerations may be required based on your residential zone. Refer to Part 6.0, Part 7.0, Part 10.0, or Part 12.0 of By-law 2024-19 and the respective mapping.

(2) Where the main building does not have an exterior side yard, and no interior side yard setback for the main building is greater than or equal to 1.2 metres, the maximum gross floor area for a garden home is 15 m^2.

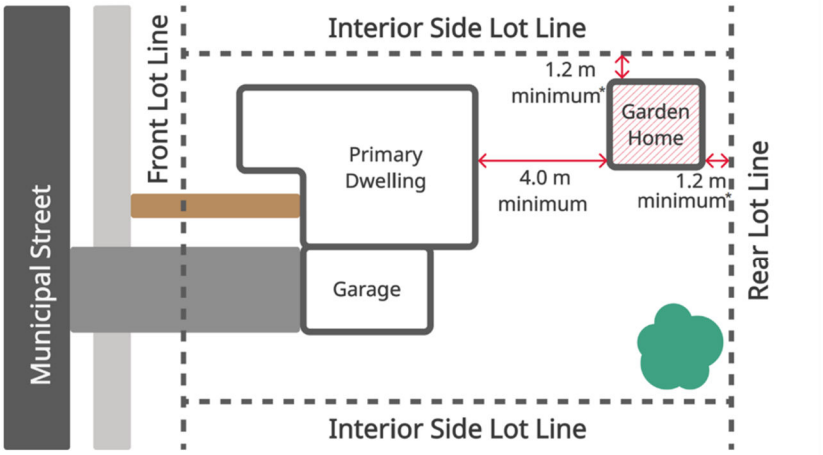

* Distance from the Garden Home to the interior side or rear lot line can be reduced to 0.5 metres if the lot area is less than 4,000 square metres and there are no windows or doors on the wall facing the lot line.

Parking Requirements

The use of public streets, lanes, etc. as a parking space for a coach house or garden home is not permitted.

Two (2) parking spaces are required for a detached dwelling, semi-detached dwelling, or townhouse dwelling.

A property containing a coach house or garden home is required to provide one (1) parking space for the main dwelling, and one (1) parking space for the coach house or garden home.

If a property also contains a secondary suite, three (3) parking spaces are required. One (1) space is required for each unit.

Each required parking space is required to be a minimum width of 2.75 metres and a minimum length of 5.8 metres.

Coach Houses and Garden Homes

Guide for Homeowners

A Single Dwelling Unit with a Coach House

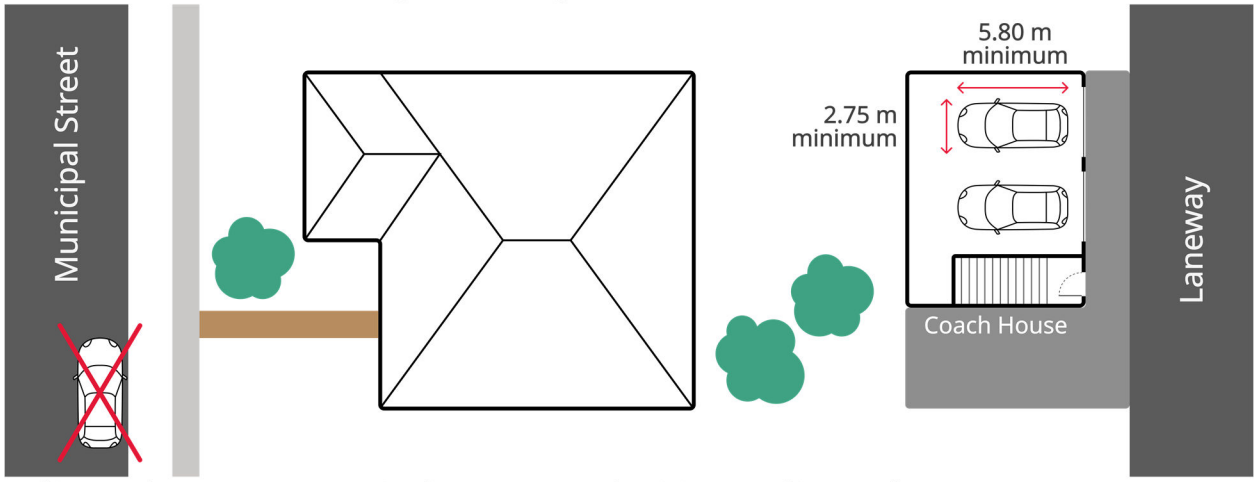

Parking On The Street Is Not Permitted To Count Towards Minimum Parking Numbers

A Single Dwelling Unit with a Garden Home

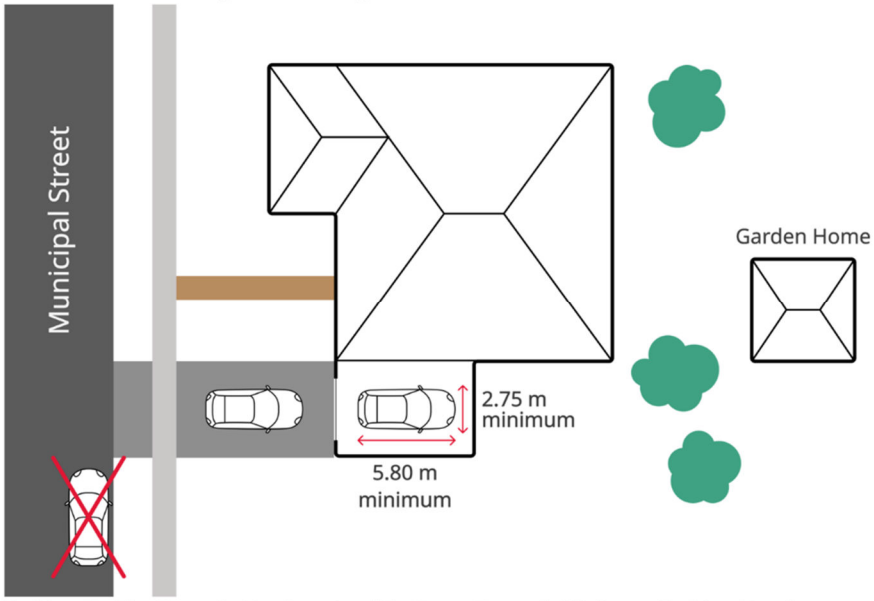

Parking On The Street Is Not Permitted To Count Towards Minimum Parking Numbers

Ontario Building Code

General

The 2024 Ontario Building Code (OBC) sets out minimum technical requirements for the design, construction, and renovation of buildings. The OBC's goal is to keep people safe by setting clear standards for health, fire safety, accessibility, energy use, and more.

It is your responsibility to make sure all rules are followed. Hiring a professional designer who understands the OBC and how the permit process works will help to ensure compliance.

This guide gives basic information to help you understand the rules for building a new detached coach house or garden home (up to 2-storeys). However, it does not include all the details. Designers and builders should review the OBC to make sure all requirements are met. A digital copy of the 2024 Ontario Building Code can be requested through the Government of Ontario Website.

Source of Image: 2024 Ontario Building Code. Copyright, King's Printer for Ontario

Fire Separation Requirements

General

A fire separation is a wall, floor, or ceiling constructed to stop fire from spreading. It can have a fire-resistance rating, which tells us how long it can stand up to heat and flames during a fire. Fire separations must be constructed as a continuous barrier, and where required, be provided with protection when penetrated (e.g., fire dampers, firestopping and door closures).

Coach Houses

A fire separation is needed between the dwelling unit and the garage, and between the dwelling unit and any shared spaces.

- 1 h fire separation between the dwelling unit and shared spaces.
- 1 h fire separation between the dwelling unit and a garage holding 5 vehicles or less.
- 1.5 h fire separation between the dwelling unit and a garage with more than 5 vehicles.
- Any parts of the building structure (like walls or columns) that support the fire separation must have the same fire-resistance rating.

Carbon monoxide and gasoline fumes can build up in garages where motor vehicles are stored. In order to prevent these hazardous gases from travelling into coach houses, a gas-tight barrier is required to be continuously provided, including at joints, between the garage and remainder of the building.

If any doors are provided between the parking garage and a coach house, they are required to be,

- ☐ tight-fitting,
- ☐ weather stripped to provide an effective barrier against the passage of gases and exhaust fumes, and
- ☐ self-closing.

Note that a parking garage is not permitted to open into a room intended for sleeping.

Garden Homes

There are no fire separation requirements within a standalone garden home.

Wall / Floor STC Rating

Airborne sound is transmitted between dwelling units directly through the separating wall, floor and ceiling assemblies.

Sound Transmission Class (STC) describes the sound isolation performance of an assembly separating two spaces along a direct transmission path.

Apparent Sound Transmission Class (ASTC) describes the sound isolation performance of an assembly separating two spaces along direct and flanking (bordering) transmission paths.

The higher the STC / ASTC rating, the better the sound isolation.

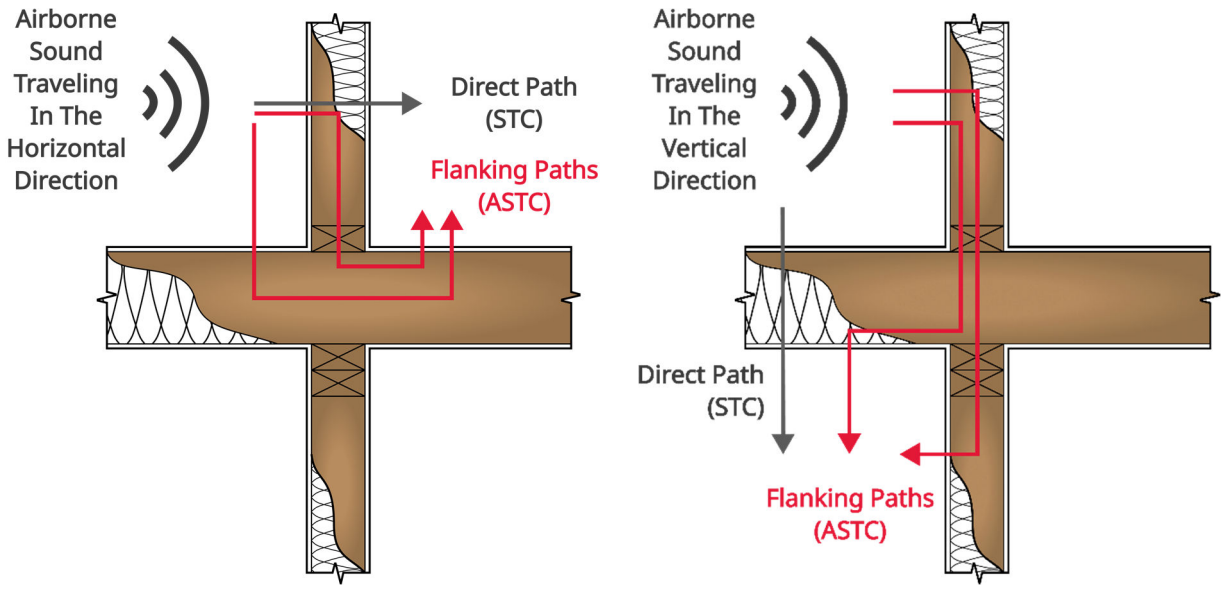

Dwelling units are required to be protected from airborne noise with **one** of the following options:

a) ASTC rating not less than 47, or
b) STC rating not less than 50.

Fire Department Access

The fire department is required to be able to access the coach house / garden home in the event of a fire emergency. Access is required to be provided to each building on the property via a street, private roadway, or yard.

In general, the following design measures are considered acceptable:

- Minimum 1.2 m unobstructed path from street to primary entrance of the dwelling unit
- Total path of travel from hydrant to fire truck to dwelling unit entrance does not exceed 90 m
- Path of travel from fire truck to dwelling unit entrance does not exceed 45 m.

Entrances

Main entrance doors to dwelling units are required to be provided with a door viewer or transparent glazing in the door or sidelight.

Exiting and Egress

General

All coach houses and garden homes are required to be provided with sufficient and safe access to exits.

A garden home or coach house is required to be provided with exit or egress doors such that it is not necessary to travel up or down more than 1 storey to reach a level with:

- an egress door in a public corridor, enclosed exit stair or exterior passageway, or
- an exit doorway not more than 1.5 m above adjacent ground level.

This is typically achieved via an exterior exit door or a shared means of egress.

Shared egress facilities conditions may require additional egress measures.

Egress pathways are not permitted to go through a service room or other occupancy.

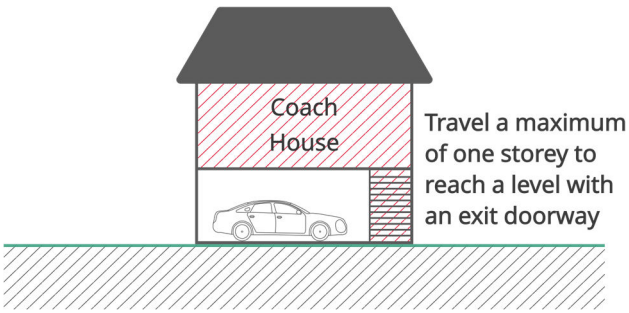

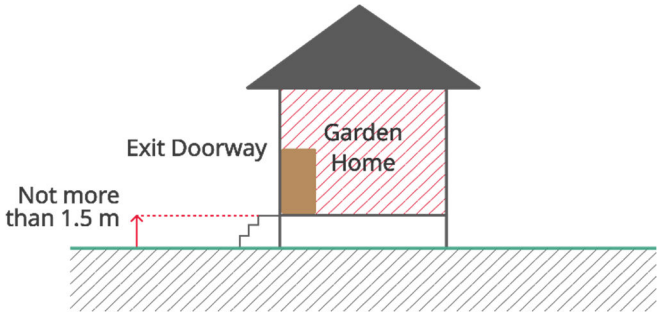

Egress Windows

Egressing from bedrooms is important in the event that a fire prevents access to an exit.

Except where a door on the same floor level as the bedroom provides direct access to the exterior, every floor level containing a bedroom is required to have at least one outside window that:

- ☐ is openable from the inside without the use of tools
- ☐ provides a minimum individual unobstructed opening area of 0.35 m^2 with no dimension less than 380 mm, and

- ☐ maintains the required opening as noted above without the need for additional support

If the bedroom / window is not located in the basement, the window is to be located with a maximum sill height of 1 000 mm above the floor. For windows in basement, it is recommended that the window be located not more than 1 500 mm above the floor.

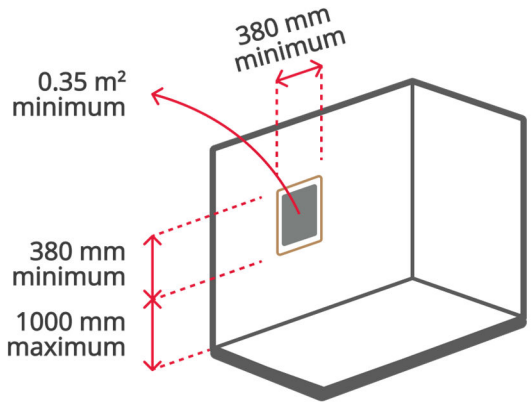

Bedroom Window Requirements Above-Grade

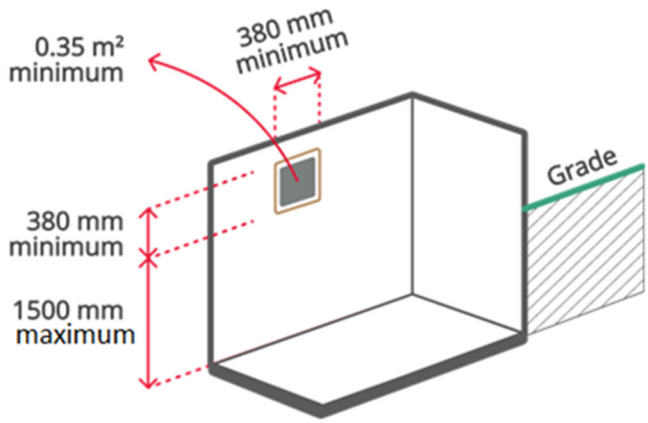

Bedroom Window Requirements In Basement

If the window is located in a window well, a clearance of 550 mm is required to be provided in front of the window (including if the door opens outwards).

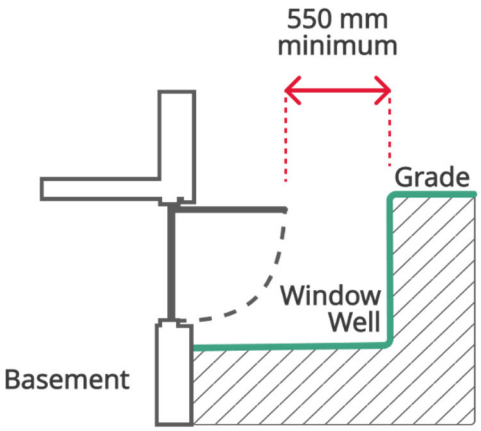

Basement Window Swinging Outwards

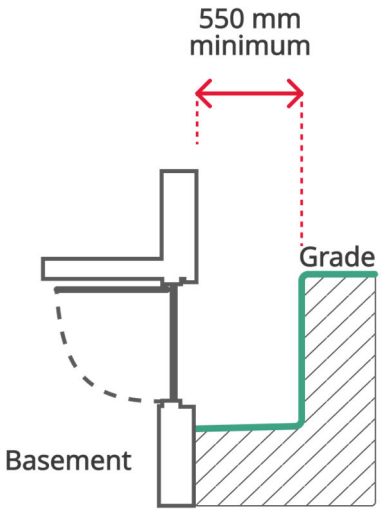

Basement Window Swinging Inwards

Protection of Exits

In some dwelling units, the only way out (leading to the street) might be an exterior stair or ramp. If there are windows or other openings from a separate compartment nearby, a fire condition in the other compartment could impact the stair or ramp. Those windows or openings need special consideration to help keep people safe when they are trying to get out.

Protection is required if:

- the openings are within 3 metres horizontally, and
- they are located less than 10 metres below or less than 5 metres above the stair or ramp.

Acceptable protection of these openings includes for:

- listed closures,
- wired glass in fixed steel frames, or
- glass block.

Other exposure conditions may require additional protection.

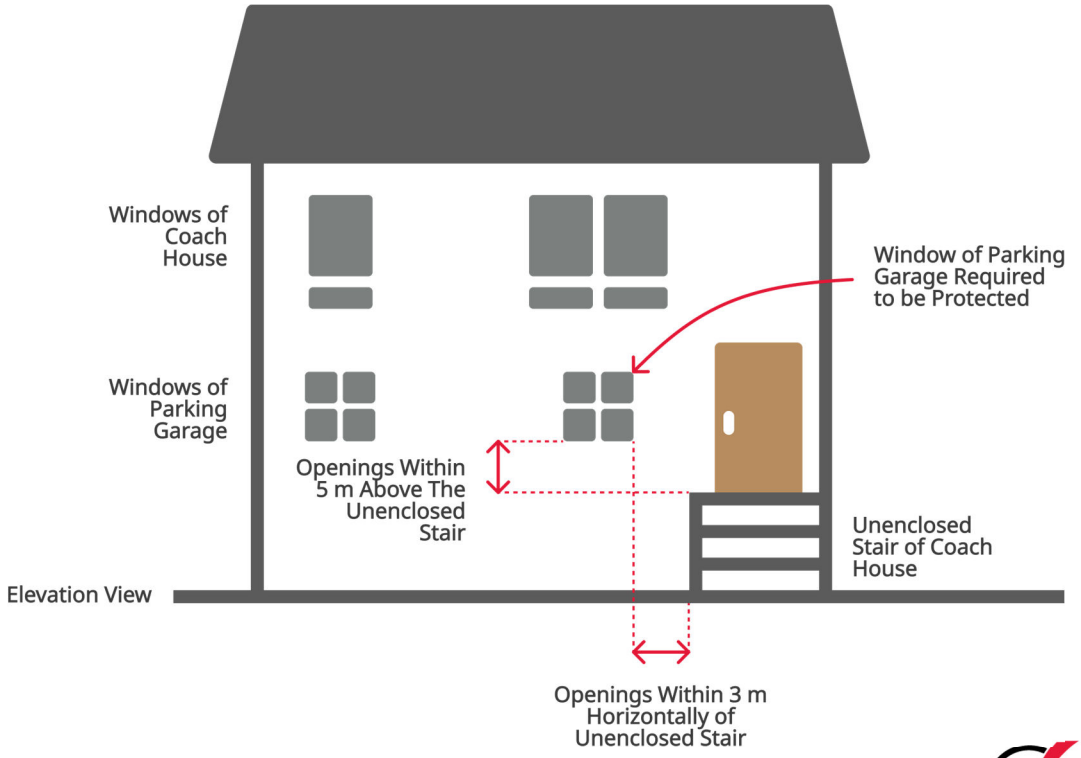

Smoke Alarms

Smoke alarms provide early detection and warning of fires. The two highest causes of fire deaths in homes are from fires starting in the kitchen and bedrooms. Most fatal fires occur while people are sleeping. It is important to provide working smoke alarms to allow enough time to react and escape.

The required locations and smoke alarm requirements are listed below.

Locations Requiring Smoke Alarms	• On every storey (including basements)
	• In each sleeping room
	• Outside each sleeping room – if the sleeping rooms are served by a hallway, the smoke alarm is to be located in the hallway
	• In service / storage spaces, common spaces, and shared means of egress
Smoke Alarms Requirements	• Interconnected (wired) so that activation of one alarm will cause all alarms within the dwelling unit to sound
	• Provided with a visual signalling component
	• Connected to an electrical circuit with battery back-up if the building is provided with electrical power

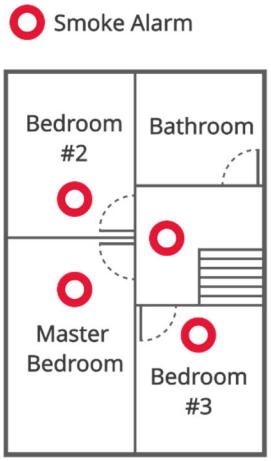

Case 1

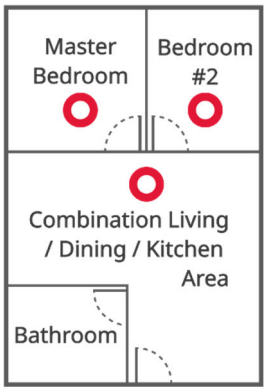

Case 2

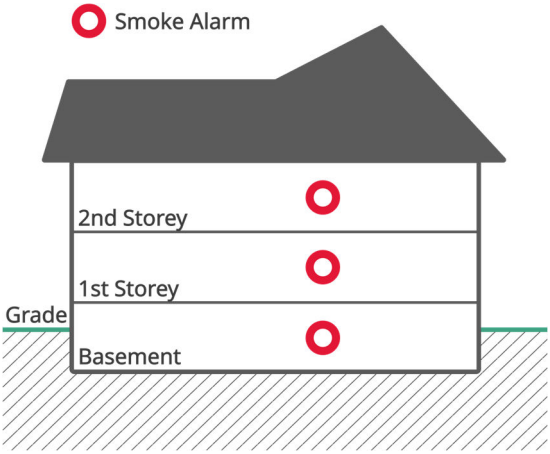

Carbon Monoxide Alarms

Carbon monoxide (CO) is a colourless, odourless gas. It can build up in an enclosed space and become dangerous without people knowing. CO can come from things like gas stoves, gas furnaces or attached garages. It is important to have carbon monoxide alarms to help detect the gas if it is present.

Locations Requiring Carbon Monoxide Alarms	• Adjacent to each sleeping room
	• In a combined sleeping and living area

	• Within each sleeping room that:
	  ○ contains a fuel burning appliance, or
	  ○ shares a common wall, floor or ceiling assembly with:
	  ▪ a room, suite or area that is outside the suite and contains a fuel-burning appliance or flue
	  ▪ a storage garage, or
	  ▪ an attic or crawl space that is adjacent to a storage garage

	• On each floor of the dwelling unit without a sleeping room
	• In the furnace room that is not within a dwelling unit
	• In a shared laundry room with laundry drying equipment
Carbon Monoxide Alarm Requirements	• Wired so that the activation of one CO alarm will activate the remaining CO alarms within the dwelling unit
	• Provided with a visual signalling component
	• Connected to an electrical circuit with battery back-up if the building is provided with electrical power (if the building is provided with electrical power)

Room Areas

Rooms in a dwelling unit must have the following minimum areas (OBC, Section 9.5):

Room / Space	Minimum Area (m^2) (1)
Living area	13.5
Living area where combined with a kitchen and dining area (in a dwelling unit with sleeping accommodation for not more than two persons)	11.0
Dining Room	7.0
Dining Room (if combined with other spaces)	3.25
Kitchen Area	4.2
Kitchen Area (in a dwelling unit with sleeping accommodation for not more than two persons)	3.7
Primary Bedroom (with built-in closet)	8.8
Primary Bedroom (without built-in closet)	9.8
Secondary Bedrooms (with built-in closet)	6.0
Secondary Bedrooms (without built-in closet)	7.0
Living room, dining, kitchen and bedroom spaces combined (studio / bachelor type suite in a dwelling unit with sleeping accommodation for not more than two persons)	13.5
Bathroom	(3)
Hallways	860 mm wide

(1) Room areas are measured between wall surfaces.
(2) The noted areas exclude washrooms and laundry areas.
(3) The bathroom area must be sufficient for the required fixtures. In general, an area of 3 m^2 maintaining a 610 mm access to the water closet, lavatory, and bathtub / shower stall. is adequate.

Measurement Taken Between Finished Surfaces
(Area of built-in closets are not included)

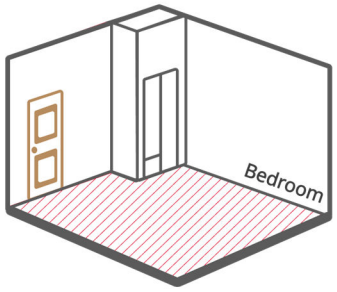

Ceiling Height

All buildings and rooms must have high enough ceilings to make sure people can leave safely in an emergency. The table below lists the minimum ceiling heights needed for coach houses and garden homes.

Room / space	Required Minimum Height (m) [1]
Living area / space, dining room / space, kitchen / kitchen space	2 300 mm over at least 75% of the required floor area with clear height of 2 100 mm at any point over the required area.
Bedroom / Bedroom Space	2 300 mm over at least 50% of the required floor area or 2 100 mm over all of the required area. Any part of the floor having a clear height of less than 1 400 mm is not considered in computing the required floor area.
Basement Space	2 100 mm over at least 75% of the basement area. Clearance under beams and ducts is permitted to be reduced to 1 950 mm.
Bathroom, water closet, or laundry area above grade	2 100 mm in any area where a person would normally be in a standing position.
Passage, hall, or main entrance vestibule and finished rooms not mentioned above	2 100 mm
Garage	2 000 mm

[1] Area of the space is required to be measured at floor level.

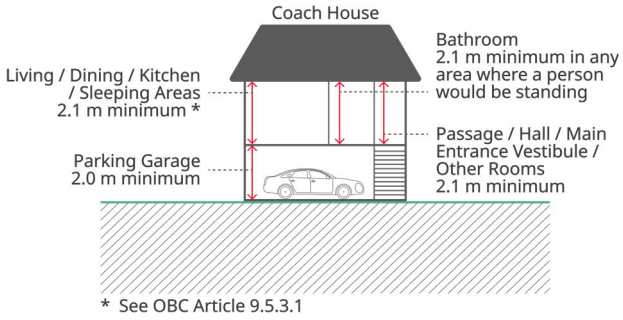

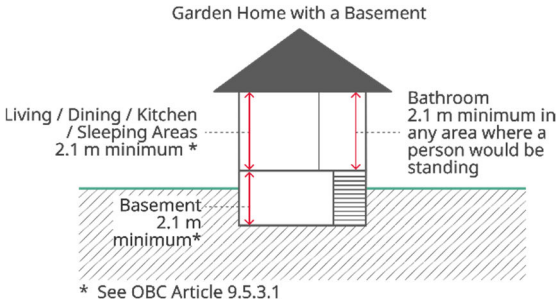

Door Sizes

Doors in dwelling units must have the minimum sizes shown in the table below:

Door Size	Minimum Width (mm)	Minimum Height (mm)
Dwelling unit entrance (including common spaces), vestibule or entrance hall	810	1 980
Stair to a floor level that contains a finished space	810	1 980
All doors in a least one line of passage from the exterior to the basement	810	1 980
Utility Rooms	810	1 980
Walk-in Closet	810	1 980
Bathroom, water-closet room, shower room	610	1 980
Rooms located off hallways that are permitted to be 710 mm wide	610	1 980
Rooms not mentioned above, and exterior balconies	760	1 980

Natural Lighting

Some types of rooms need natural light and a view to the outdoors. The OBC requires minimum window glass areas in the rooms listed below.

Room / Space	Minimum Unobstructed Glass Area with No Electric Lighting	Minimum Unobstructed Glass Area with Electric Lighting
Laundry, basement recreation room, unfinished basement	4% of area served	Windows not required
Water-closet room	0.37 m^2	Windows not required
Kitchen (including kitchen space, and alcove)	10% of area served	Windows not required
Living rooms and dining rooms	10% of area served	
Bedrooms and other finished rooms not mentioned above	5% of area served [(1)]	

[(1)] Refer to Exiting and Egress Section of this guide for additional window area requirements.

Example 1

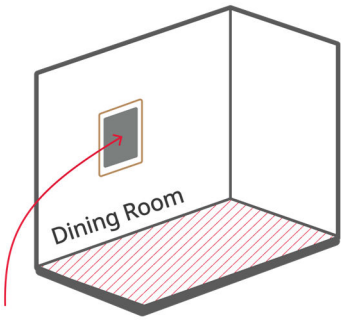

Dining Room Floor Area = 7 m^2

Minimum Unobstructed Glass Area 10% of 7 m2 = 0.7 m^2

Example 2

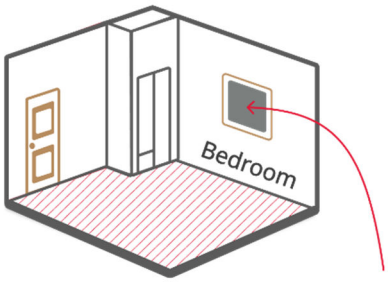

Bedroom Floor Area = 10 m^2

Minimum Unobstructed Glass Area 5% of 10 m2 = 0.5 m^2

Spatial Separation

The OBC has rules for spatial separation and limiting distance. This helps stop fires from spreading beyond the building of origin. The closer buildings are to a property line or another building on the same property, the fewer windows or doors are allowed on that side.

For coach houses and garden homes, the rules about how much space is needed are found in Subsection 9.10.15 of the OBC. The exemptions for a detached garage / accessory building outlined in Sentences 9.10.15.4.(6) and 9.10.15.5.(4) do not apply to a coach house or garden home.

The size of windows allowed for the coach house / garden home depends on how far it is from the main house, how many windows are on the main house wall and the distance between the two buildings.

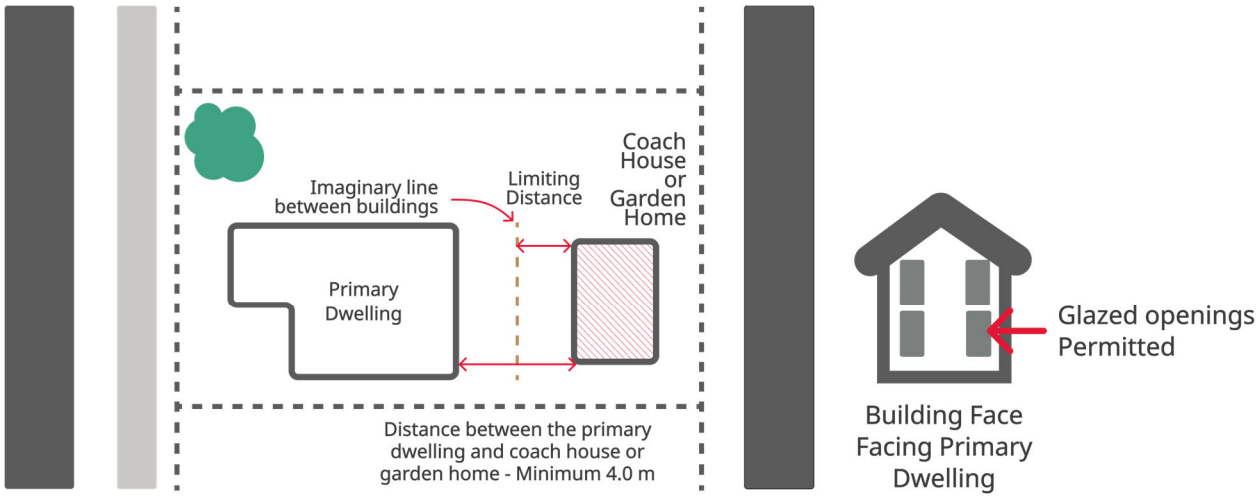

Refer to Table 9.10.15.4 for maximum area of glazed openings permitted.

The imaginary line between buildings must be determined based on the existing glazed openings on the building face of the primary dwelling facing the coach house or garden home.

Thermal Insulation

All walls, ceilings and floor separating a heated space from an unheated space (e.g., between the coach house and the detached parking garage), exterior air or exterior soil, is required to be provided with thermal insulation to prevent moisture condensation and improve occupant comfort. The Building Code outlines minimum energy efficiency requirements for the building in Supplementary Standard SB-12. The insulation provided in fire-rated assemblies should be noncombustible mineral wool.

HVAC Requirements and Restrictions

A self-contained ventilation system is required to be provided for each coach house / garden home.

Heating systems are required to be capable of maintaining an indoor air temperature of not less than:

a) 22 °C in all living spaces,
b) 18 °C in unfinished basements, and
c) 15 °C in heated crawl spaces.

Air duct systems for a coach house are not permitted to be interconnected with other parts of its respective building. Continuity of fire separations must be maintained when considering the HVAC design.

Plumbing Facilities

OBC Section 9.31 outlines requirements for plumbing facilities within dwelling units. Each dwelling unit must have:

- Kitchen sink
- Lavatory
- Bathtub / shower
- Water closet, and
- Laundry facilities.

A coach house / garden home is required to have its own water shut-off valve. This makes sure that if you turn off the water to the coach house / garden home, it won't stop the water to the main house.

Installation of plumbing facilities and compliance with the OBC will need to be conducted by a qualified plumber.

Most properties in Markham have municipal water and sewer services. If you are adding a coach house or garden home, the water and sewer services must be the right size. It is important to make sure that the water service entering your property is big enough to handle the fixtures in the main house and the new coach house or garden home.

If your property has a septic system, it may need upgrades to accommodate a coach house or garden home.

Electrical Facilities and Lighting

Every entrance is required to be provided with exterior lighting outlet with fixture controlled by a wall switch located within the building.

The OBC requires that a lighting outlet with a fixture controlled by wall switches be provided in kitchens, bedrooms, living rooms, utility rooms, laundry rooms, dining rooms, bathrooms, vestibules, storage rooms, hallways, and garages.

Stairways with more than 4 risers are required to be lighted with 3-way wall switches located at the top and bottom of the stair.

The Ontario Electrical Safety Code has further requirements when adding a coach house / garden home. Electrical service to and into the coach house / garden home is to be sized appropriately.

How to Apply

Building Permit Requirements

The creation of all coach houses and garden homes must follow the rules in the Ontario Building Code and needs a building permit. After the construction is complete, the coach house / garden home is required to be registered with the Markham Fire and Emergency Services. These requirements are intended to make sure it is safe, legal and livable.

What You Need to Apply for a Building Permit

What you need to submit depends on where the house is located, the type of services on the lot, and whether the building is new or being renovated.

There are four main parts to every building permit application:

1. Application Forms
2. Documents
3. Construction drawings
4. Permit Fees

You must apply online at eplanportal.markham.ca/.

A comprehensive list of the required drawings, documents and forms can be found online at markham.ca/economic-development-business/building-permits/guide-building-permits

Who Can Prepare the Drawings?

Drawings for the permit can be made by:

- A registered designer with a Building Code Identification Number (BCIN) qualified in House or Small Buildings.
- A licensed Architect
- A Professional Engineer
- The homeowner, provided that they understand and are willing to take responsibility for the requirements of the Ontario Building Code.

Building Inspections

Why Inspections Matter

Inspections make sure your project follows the Ontario Building Code and the City of Markham's by-laws. This keeps people safe and protects your home's value.

When Inspections Happen

Here are the main times that inspections are needed:

- **Footings/Foundation** (if applicable): Required for new foundations or basement walkouts.
- **Framing**: After the structure is built but before insulation or drywall.
- **Plumbing and Mechanical Rough-In**: Before the pipes and systems are covered up.
- **Insulation and Vapour Barrier**: After insulation is added but before drywall.
- **Fire Separations and Fire Stopping** *(if applicable)*: To check fire-rated walls and ceilings and the sealing around penetrations.
- **Occupancy/Completion**: When the work is finished and the unit is ready for occupancy.

How to Book an Inspection

Book inspections at least 24 hours ahead using via the **ePLAN portal**. You will need your Building Permit Number, site address and inspection details.

What Happens During an Inspection

If the work complies, the Building Inspector will approve the stage and you can move to the next step. If corrections are needed, the inspector will issue a Field Inspection Report. You must make the corrections and get it re-inspected before moving on.

Final Approval and Occupancy

After passing the Occupancy/Completion Inspection, your project is approved and your building permit is closed.

Helpful Tips

- Keep your Building Permit and approved plans on-site for inspections.
- Coordinate with your contractor to ensure inspections are ready.
- Keep copies of all inspection reports.

For more details about secondary suites and the inspection process, please contact Building Standards – Inspection Services at 905.475.4858 extension 2189.

Registration

All coach houses and garden homes must be registered with Markham Fire and Emergency Services. This means that the coach house / garden home must be checked by Fire and Emergency Services staff. There is a fee for this inspection and registration.

To register, you must allow the inspectors to see all parts of the home and provide the following:

- Proof of home insurance that covers both the principal dwelling unit and the coach house / garden home
- A general electrical inspection report
- Smoke and carbon monoxide (CO) alarms on every level — they must not be expired, must be in the correct locations, and must have the correct power source
- A check of the kitchen stove and dryer exhaust ducts to make sure they use semi-rigid or smooth metal connections
- A check of the wall and door between the garage and the dwelling unit — the door must close by itself and latch properly
- A check of the fire department access to the coach house / garden home

After you provide all the documents and fix any problems found during the inspection, Markham Fire and Emergency Services will give you a letter to show your unit is registered.

For more information, contact:

Markham Fire & Emergency Services
905.415.7521
Fire-PreventionChiefs@markham.ca

Contact Us

Additional Residential Units

This guide was produced by the City of Markham. If you have any questions or comments, please contact us at BuildingARUs@markham.ca

Permit Application Status

Building Permit Administration
905.475.4870
buildingstandards@markham.ca

Building Inspections

Building Inspections
905.475.4858 extension 2189
bins@markham.ca

Registration

Markham Fire & Emergency Services
905.415.7521
Fire-PreventionChiefs@markham.ca