Building Standards

3 and 4 Dwelling Unit Building Conversions

Guide for Homeowners

MARKHAM

Table of Contents

Table of Contents 1
Background 4
How To Use This Guide 4
What Are 3- or 4-Dwelling Unit Buildings? 4
Before Converting Your Home 5
Zoning 6
Introduction 6
Site Requirements 6
Parking Requirements 7
Ontario Building Code 8
General 8
Fire Separation Requirements 9
Parking Garage Separation 11
Wall / Floor STC Rating 12
Fire Department Access 13
Entrances 13
Exiting and Egress 14
General 14
Egress Windows 15
Protection of Exits 17
Smoke Alarms 19
Carbon Monoxide Alarms 20
Room Areas 21
Ceiling Height 22
Door Sizes 24
Natural Lighting 25
Spatial Separation 26

Thermal Insulation 26
HVAC Requirements and Restrictions 26
Plumbing Facilities 27
Electrical Facilities and Lighting 28
Barrier-free Accessibility Considerations 28
How to Apply 29
Building Permit Requirements 29
What You Need to Apply for a Building Permit 29
Who Can Prepare the Drawings? 29
Building Inspections 30
Why Inspections Matter 30
When Inspections Happen 30
How to Book an Inspection 30
What Happens During an Inspection 30
Final Approval and Occupancy 30
Helpful Tips 31
Registration 31
Contact Us 32
Additional Residential Units 32
Permit Application Status 32
Building Inspections 32
Registration 32

Disclaimer:

This guide is provided for general information purposes only and may not include all applicable requirements. The City of Markham makes no representations or warranties, express or implied, regarding the accuracy, completeness, or currency of the information contained herein, and assumes no responsibility for any consequences arising from its use. Individuals are responsible for ensuring compliance with all applicable laws, regulations, and municipal requirements, including but not limited to all Markham by-

laws and the *Ontario Building Code*. It is strongly recommended that individuals consult with qualified professionals before undertaking any construction activities. Information in this guide is subject to change without notice.

Background

How To Use This Guide

This guide outlines the requirements for converting a single or semi-detached dwelling into a 3- or 4-dwelling unit building in the City of Markham. It is based on the 2024 Ontario Building Code (OBC) and City of Markham Zoning By-law 2024-19. The guide will help you find out if your home can be converted into a 3- or 4-dwelling unit building and how to apply for a permit to build one.

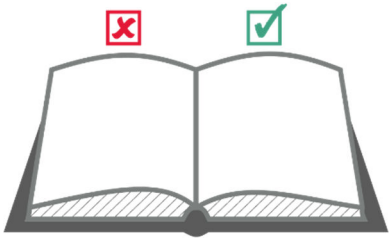

What Are 3- or 4-Dwelling Unit Buildings?

A 3- or 4-dwelling unit building is a building with three or four separate dwelling units. When converting a single or semi-detached house into a 3- or 4-dwelling unit building, some of the units may be built one on top of another (this is called 'stacked').

This guide is for changing a single detached dwelling into a 3- or 4-unit building when:

- The building is 3 storeys or less in height, and
- The building area (footprint) is 600 m^2 or less.

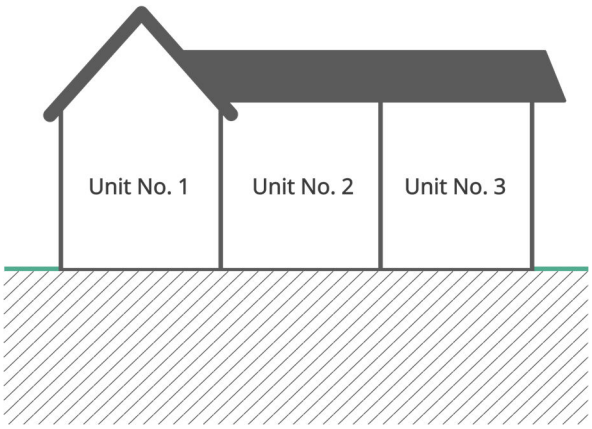

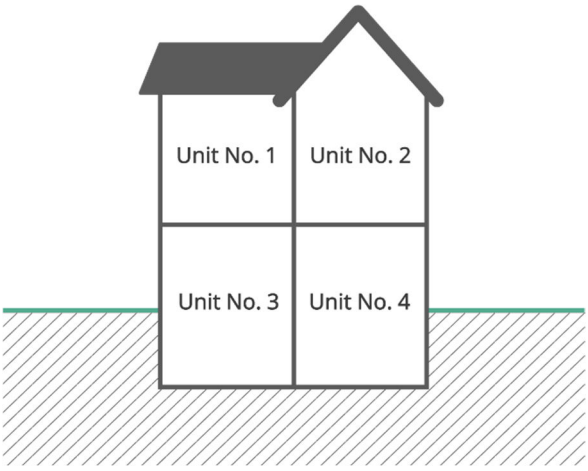

Before Converting Your Home

You need to obtain a building permit before converting your home into a 3- or 4-dwelling unit building. It is important to understand the building permit process and the required inspections needed to successfully convert your home into a 3- or 4-dwelling unit.

In Markham, all additional dwelling units are required to be registered with Markham Fire and Emergency Services.

Zoning

Introduction

All buildings must comply with the City of Markham's zoning by-laws. Where permitted, the requirements for a building containing 3- dwelling units are found under Additional Residential Units in By-law 2024-19.

Use the City of Markham's Property Details Search tool to find out the zoning applicable to your property. This free service provides the zone designation, official plan designation, by-law number, and applicable law summary.

This guide provides a summary of the zoning information for properties in By-law 2024-19. Other zoning requirements may apply to your project.

If your property is not in 2024-19, you can view the applicable zoning by-law at the Development Services Counter at the Civic Centre or submit a Zoning Search.

Site Requirements

Setbacks [1]	Only one dwelling unit entrance is allowed to be located along any main wall facing the street, unless the other dwelling unit entrance is located below-grade. If direct access is provided from the interior side yard of the property, the building is required to be located at a minimum of 1.2 metres from the interior side lot line. Stairs accessing the building are not permitted to be located within 1.2 metres from the interior side lot line

[1] Additional setback considerations may be required based on your residential zone. Refer to By-law 2024-19 and the respective mapping.

Parking Requirements

The use of public streets, lanes, etc. as a parking space for a 3- or 4-dwelling unit building is not permitted.

One (1) parking space is required for each dwelling unit. If a property contains three dwelling units, three (3) parking spaces are required. If a property contains four dwelling units, four (4) parking spaces are required.

Each required parking space is to be a minimum width of 2.75 metres and a minimum length of 5.8 metres.

Ontario Building Code

General

The 2024 Ontario Building Code (OBC) sets out minimum technical requirements for the design, construction, and renovation of buildings. The OBC's goal is to keep people safe by setting clear standards for health, fire safety, accessibility, energy use, and more.

It is your responsibility to make sure all rules are followed. Hiring a professional designer who understands the OBC and how the permit process works will help to ensure compliance.

The appropriate OBC requirements depend on how old the home is:

- Buildings less than five (5) years old must follow Part 9 of the OBC.
- Buildings more than five (5) years old may follow more flexible rules in Part 11 of the OBC.

This guide gives basic information to help you understand the rules for converting a single detached dwelling to a 3- or 4-dwelling unit building. However, it does not include all the details. Designers and builders should review the OBC to make sure all requirements are met. A digital copy of the 2024 Ontario Building Code can be requested through the Government of Ontario Website.

Source of Image: 2024 Ontario Building Code. Copyright, King's Printer for Ontario

Fire Separation Requirements

A fire separation is a wall, floor, or ceiling constructed to stop fire from spreading. It can have a fire-resistance rating, which tells us how long it can stand up to heat and flames during a fire. Fire separations must be constructed as a continuous barrier, and where required, be provided with protection when penetrated (e.g., fire dampers, firestopping and door closures).

The following is a high-level summary of the minimum fire separation requirements:

Requirements	< 5 Years Old (Part 9 Requirements)	> 5 Years Old (Part 11 Requirement)
Floors Entirely Within Dwelling units (Fire-Rating) (1)	45-minute fire-resistance rating	30-minute fire-resistance rating is permitted
Dwelling Unit Separation including Floors	45-minute fire-resistance rating Dwelling units containing 2 or more storeys (including basements) are required to be provided with a 1-hour fire-resistance rating	30-minute fire-resistance rating is permitted
Public Corridor Separation	45-minute fire-resistance rating	30-minute fire-resistance rating is permitted
Exit Stair (2)	45-minute fire-resistance rating	30-minute fire-resistance rating is permitted
Garage Separation (3)	**Shared garage containing 5 motor vehicles or less:** 1-hour fire-resistance rating **Shared garage containing more than 5 motor vehicles:** 1.5-hour fire-resistance rating	
Service Rooms	1-hour fire-resistance rating	30-minute fire-resistance rating is permitted

Requirements	< 5 Years Old (Part 9 Requirements)	> 5 Years Old (Part 11 Requirement)
Service Rooms Containing Fuel-fired Appliances	1-hour fire-resistance rating	
Common Garbage and Recycling Storage Rooms	45-minute fire-resistance rating	
Common Residential Storage Rooms	45-minute fire-resistance rating	
Loadbearing Assemblies (e.g., columns, beams, loadbearing walls, and arches, etc.)	Fire-resistance rating of not less than that required for the supported floor or roof assembly	
Doors for Dwelling Units within a Shared Means of Egress	**Dwelling units with a 45-minute fire-resistance rating:** 20-minute fire-protection rating required with self-closing devices [3] **Dwelling units with a 1-hour fire-resistance rating:** 45-minute fire-protection rating required with self-closing devices [3]	Existing functional and sound doors in existing buildings may be permitted Where self-closing devices are required, existing functionally operable self-closing devices are acceptable
Doors for Shared Garbage and Recycling Storage Rooms	20-minute fire-protection rating with self-closing devices [3]	Existing functional and sound doors in existing buildings may be permitted Where self-closing devices are required, existing functionally operable self-closing devices are acceptable
Doors for Public Residential Storage Rooms		

Requirements	< 5 Years Old (Part 9 Requirements)	> 5 Years Old (Part 11 Requirement)
Doors for Service Rooms[3]	45-minute fire protection rating with self-closing devices [3]	Existing functional and sound doors in existing buildings may be permitted Where self-closing devices are required, existing functionally operable self-closing devices are acceptable
Doors for Service Rooms Containing Fuel-fired Appliances		

(1) Floor assemblies contained entirely within a dwelling unit are not required to be constructed as fire separations.
(2) Requirements for exit integrity will need to be achieved.
(3) Additional options may apply.

Parking Garage Separation

Along with fire separation requirements, there must also be a gas-tight barrier between the garage and the rest of the building. This includes sealing any joints. The barrier stops hazardous gases, like carbon monoxide and gasoline fumes, from getting into the building.

If any doors are provided between the parking garage and a dwelling unit, they are required to be,

- ☐ tight-fitting,
- ☐ weather-stripped to provide an effective barrier against the passage of gases and exhaust fumes, and
- ☐ self-closing.

Note that a parking garage is not permitted to open into a room intended for sleeping.

Wall / Floor STC Rating

Airborne sound is transmitted between dwelling units directly through the separating wall, floor and ceiling assemblies.

Sound Transmission Class (STC) describes the sound isolation performance of an assembly separating two spaces along a direct transmission path.

Apparent Sound Transmission Class (ASTC) describes the sound isolation performance of an assembly separating two spaces along direct and flanking (bordering) transmission paths.

The higher the STC / ASTC rating, the better the sound isolation.

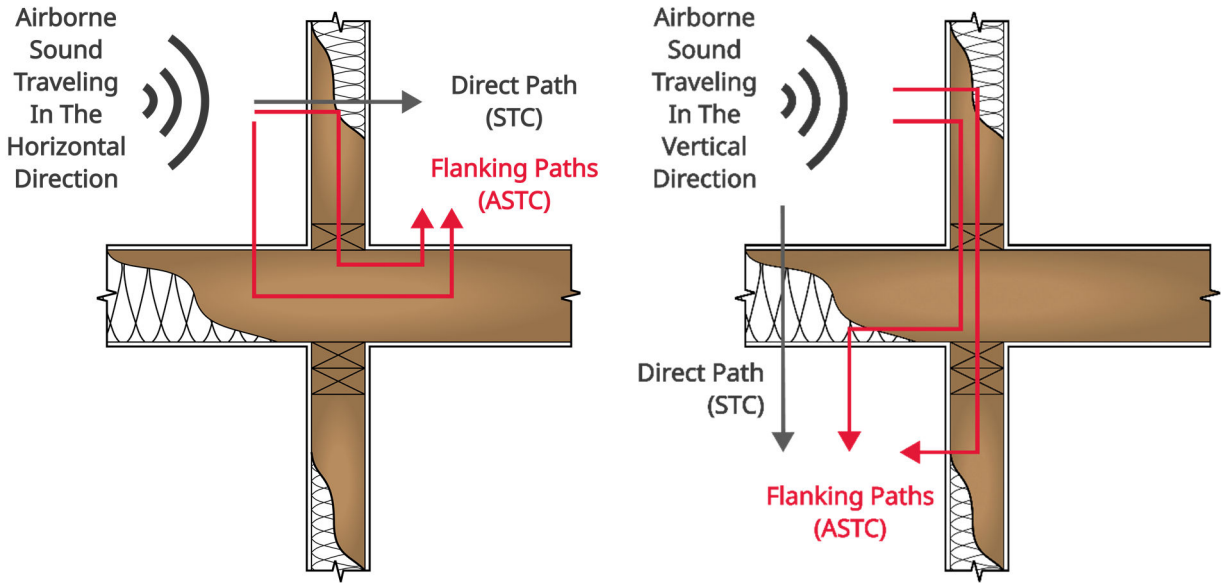

Dwelling units are required to be protected from airborne noise with **one** of the following options:

a) ASTC rating not less than 47, or

b) STC rating not less than 50.

Fire Department Access

The fire department is required to be able to access each dwelling unit in the event of a fire emergency. Where a dwelling unit is cut off (inaccessible) from the front entrance to the building, direct access must be provided to the unit entrance.

In general, the following design measures are considered acceptable:

- ☐ Minimum 1.2 m unobstructed path from street to primary entrance of the dwelling unit
- ☐ Total path of travel from hydrant to fire truck to dwelling unit entrance does not exceed 90 m
- ☐ Path of travel from fire truck to dwelling unit entrances does not exceed 45 m

Entrances

Main entrance doors to dwelling units are required to be provided with a door viewer or transparent glazing in the door or sidelight.

Exiting and Egress

General

All dwelling units are required to be provided with sufficient and safe access to exits.

Where a floor contains more than one suite, each suite is required to have an exterior exit doorway, a doorway to a shared public corridor, doorway leading into a shared exit, or a doorway to an exterior passageway.

A dwelling unit is required to be provided with a second and separate means of egress where the egress door from the dwelling unit:

- opens onto an exit stairway serving more than one suite,
- a corridor serving more than one suite and is served by a single exit, or
- an exterior passageway / balcony that is serving more than one suite, is served by a single exit stairway / ramp, and is more than 1.5 m above the adjacent ground level.

Egress pathways are not permitted to go through another dwelling unit, service room or other occupancy.

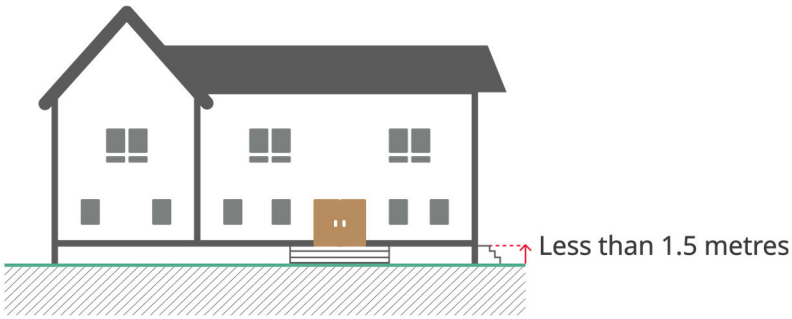

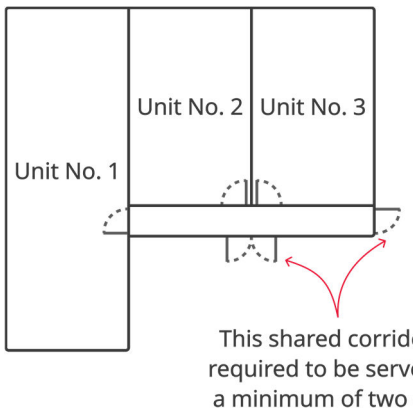

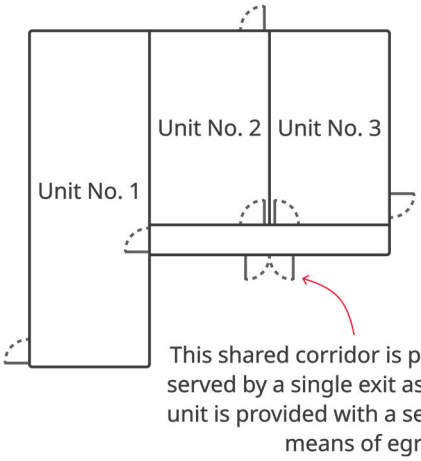

Exit / egress facilities may need to be added to the building depending on the building and dwelling unit layouts.

Egress Windows

Egressing from bedrooms is important in the event that a fire prevents access to an exit.

Except where a door on the same floor level as the bedroom provides direct access to the exterior, every floor level containing a bedroom is required to be provided with at least one outside window that:

- ☐ is openable from the inside without the use of tools,
- ☐ provides a minimum individual unobstructed opening area of 0.35 m^2 with no dimension less than 380 mm, and
- ☐ maintains the required opening as noted above without the need for additional support.

If the bedroom is not located in the basement, the window is to be located with a maximum sill height of 1 000 mm above the floor. For windows in basement, it is recommended that the window be located not more than 1 500 mm above the floor.

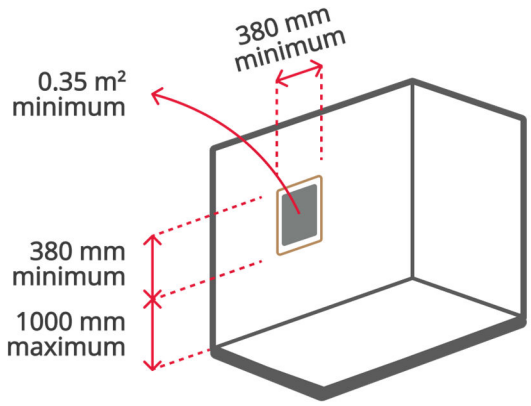

Bedroom Window Requirements Above-Grade

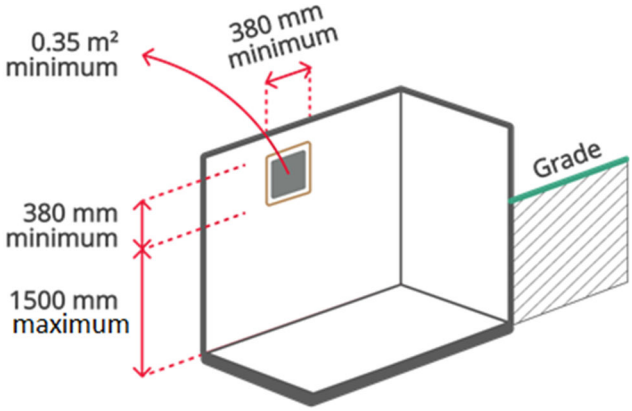

Bedroom Window Requirements In Basement

If the window is located in a window well, a clearance of 550 mm is required to be provided in front of the window (including if the door opens outwards).

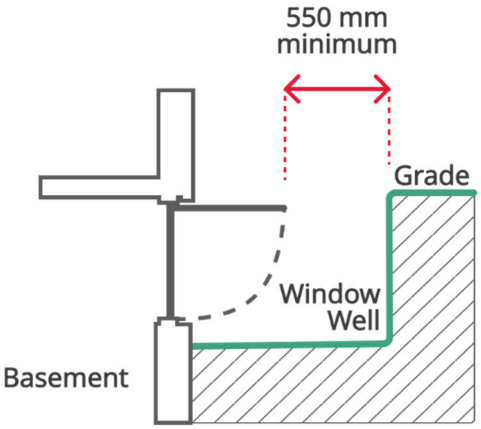

Basement Window
Swinging Outwards

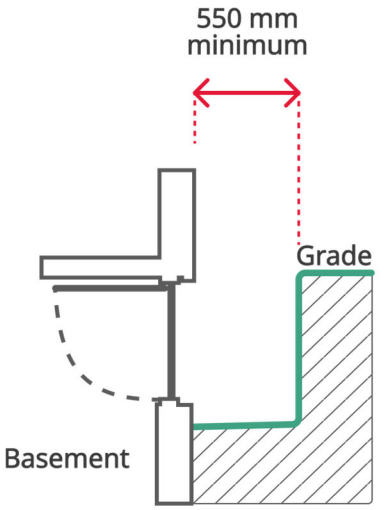

Basement Window
Swinging Inwards

Protection of Exits

If there are windows or other openings from a separate compartment nearby an exit, a fire condition in the other compartment could impact the exit. Those windows or openings need special consideration to help keep people safe when they are trying to get out.

Protection is required if:

In the Case of An Enclosed Exit Stair or Ramp	• the openings are within 3 metres horizontally less than 2 metres above the openings in the exterior walls of enclosed exit stairs or ramps, and • the exterior walls containing the openings and the wall of the enclosed exit stair or ramp intersect at an angle less than 135 degrees
In the Case of an Exterior Unenclosed Stair or Ramp	• where the exterior unenclosed stair or ramp provides the only means of egress from a dwelling unit and the openings are within 3 metres horizontally and less than 10 metres below or less than 5 metres above the stair or ramp
In the Case of Exit Doors Serving Multiple Dwelling Units <u>or</u> Exit Doors Serving an Individual Dwelling Unit Where There is Not a Second and Separate Exit From The Dwelling Unit	• the openings are located within 3 metres horizontally of the exit doors, and • the exterior walls containing the openings and the exit doors intersect at an angle less than 135 degrees

Acceptable protection of these openings can include:

- listed closures,
- wired glass in fixed steel frames, or
- glass block.

3 and 4 Dwelling Unit Building Conversions

Guide for Homeowners

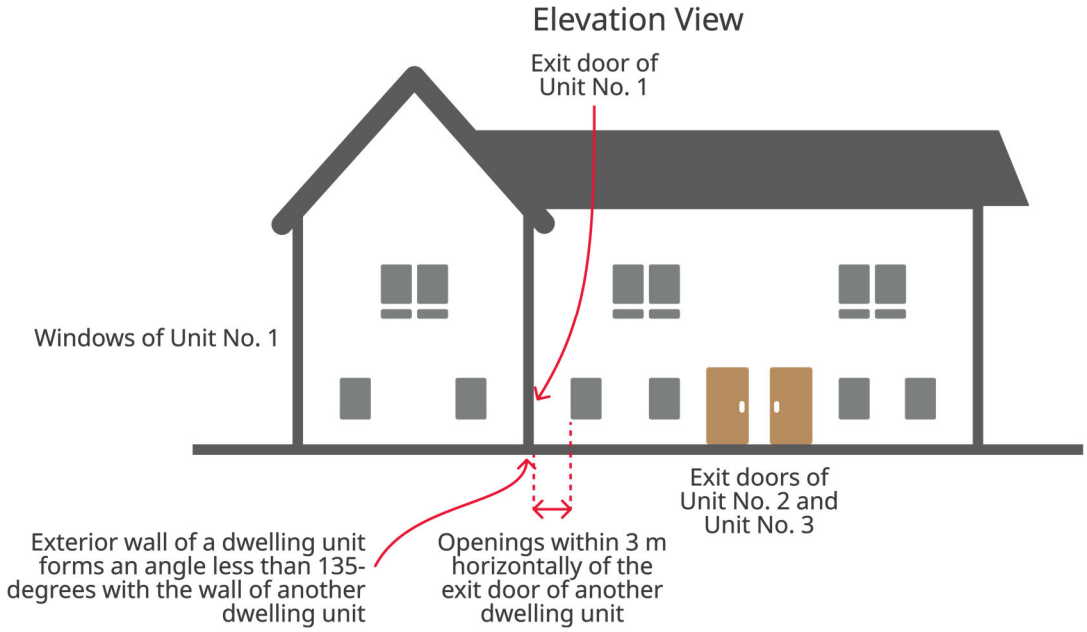

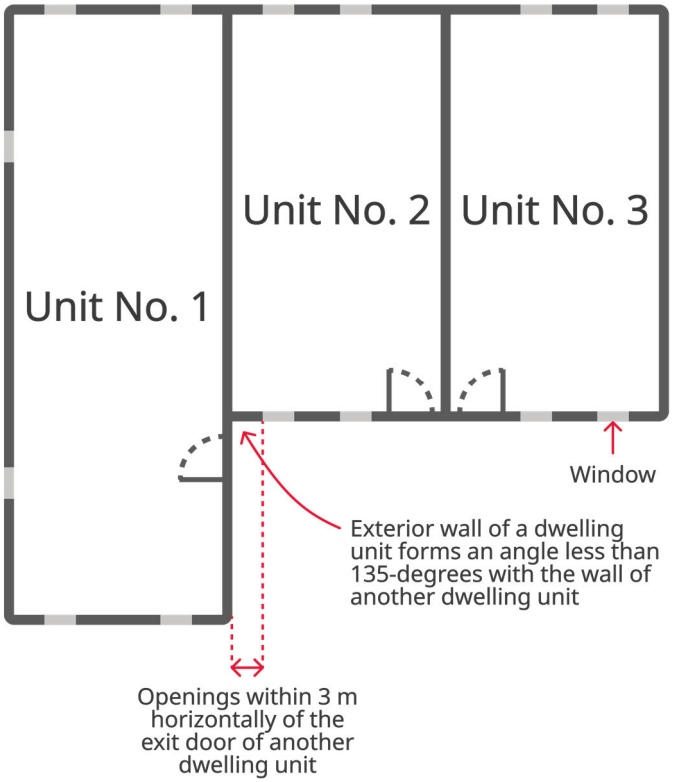

Other exposure conditions may require additional protection.

Smoke Alarms

Smoke alarms provide early detection and warning of fires. The two highest causes of fire deaths in homes are from fires starting in the kitchen and bedrooms. Most fatal fires occur while people are sleeping. It is important to provide working smoke alarms to allow enough time to react and escape.

The required locations and smoke alarm requirements are listed below.

Locations Requiring Smoke Alarms	• On every storey (including basements)
	• In each sleeping room
	• Outside each sleeping room – if the sleeping rooms are served by a hallway, the smoke alarm is to be located in the hallway
	• In service / storage spaces, common spaces, and shared means of egress
Smoke Alarms Requirements	• Wired so that the activation of any one smoke alarm causes all smoke alarms within the dwelling unit to sound
	• Provided with a visual signalling component
	• Connected to an electrical circuit with battery back-up if the building is provided with electrical power • Buildings older than five (5) years are permitted to have battery operated smoke alarms

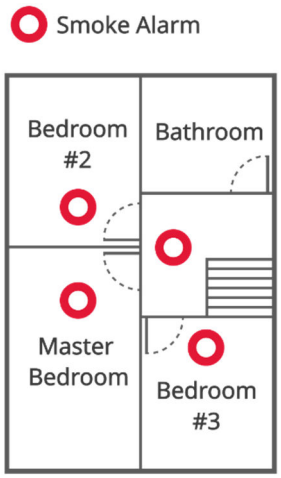

Case 1

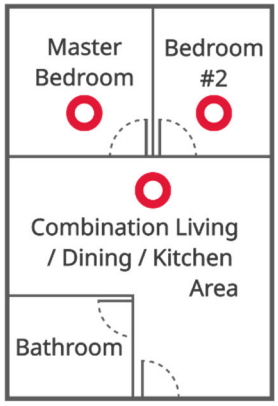

Case 2

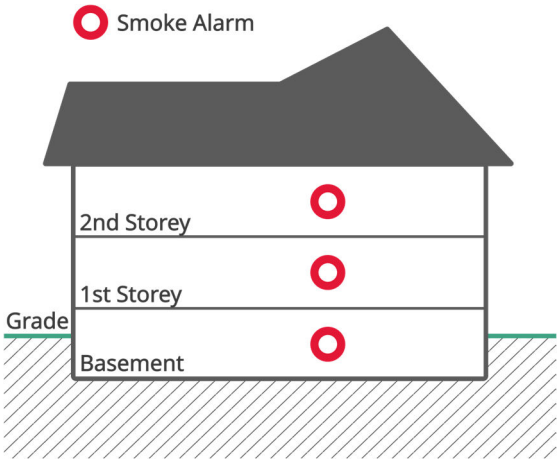

Carbon Monoxide Alarms

Carbon monoxide (CO) is a colourless, odourless gas. It can build up in an enclosed space and become dangerous without people knowing. CO can come from things like gas stoves, gas furnaces or attached garages. It is important to have carbon monoxide alarms to help detect the gas if it is present.

Locations Requiring Carbon Monoxide Alarms	• Adjacent to each sleeping room
	• In a combined sleeping and living area

	• Within each sleeping room that:
	  ○ contains a fuel burning appliance, or
	  ○ shares a common wall, floor or ceiling assembly with:
	  ▪ a room, suite or area that is outside the suite and contains a fuel-burning appliance or flue
	  ▪ a storage garage, or
	  ▪ an attic or crawl space that is adjacent to a storage garage

	• On each floor of the dwelling unit without a sleeping room
	• In the corridor that serves multiple dwelling units where the corridor is directly heated by a forced-air fuel burning appliance (1)
	• In service rooms containing fuel-burning appliances that are not within a dwelling unit
	• In a shared laundry room with laundry drying equipment
Carbon Monoxide Alarm Requirements	• Wired so that the activation of one CO alarm within a suite will activate the remaining CO alarms within that suite
	• Wired so that the activation of one CO alarm located in a public corridor serving multiple suites will activate all CO alarms located within the public corridor
	• Provided with a visual signalling component

	• Connected to an electrical circuit with battery back-up if the building is provided with electrical power • Buildings older than five (5) years are permitted to have CO alarms that are battery operated or plugged into the electrical outlet
(1) Each carbon monoxide alarm in an undivided portion of a corridor is to be not more than 25 m apart	

Room Areas

Rooms in a dwelling unit must have the following minimum areas (OBC, Section 9.5):

Room / Space	Minimum Area (m^2) (1) (2)
Living area	13.5
Living area where combined with a kitchen and dining area (in a dwelling unit with sleeping accommodation for not more than two persons)	11.0
Dining Room	7.0
Dining Room (if combined with other spaces)	3.25
Kitchen Area	4.2
Kitchen Area (in a dwelling unit with sleeping accommodation for not more than two persons)	3.7
Primary Bedroom (with built-in closet)	8.8
Primary Bedroom (without built-in closet)	9.8
Secondary Bedrooms (with built-in closet)	6.0
Secondary Bedrooms (without built-in closet)	7.0
Living room, dining, kitchen and bedroom spaces combined (studio / bachelor type suite in a dwelling unit with sleeping accommodation for not more than two persons)	13.5

Room / Space	Minimum Area (m^2) (1) (2)
Bathroom	(3)
Hallways	860 mm wide (4)
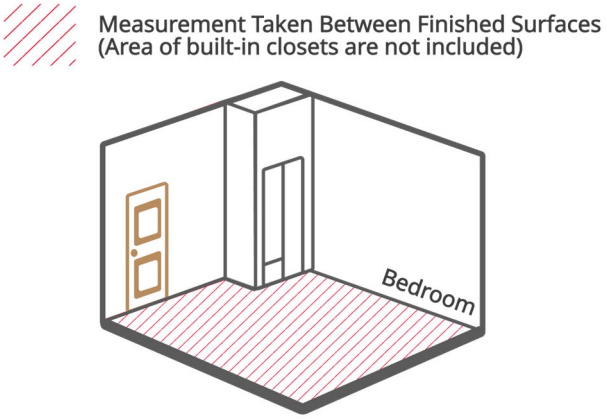	(1) Room areas are measured between wall surfaces. (2) The noted areas exclude washrooms and laundry areas. (3) The bathroom area must be sufficient for the required fixtures. In general, an area of 3 m^2 maintaining a 610 mm access to the water closet, lavatory, and bathtub / shower stall. is adequate. (4) Where barrier-free access is required, a minimum hallway width of 1 100 mm is required to select rooms / locations.

Ceiling Height

All buildings and rooms must have high enough ceilings to make sure people can leave safely in an emergency.

The table below lists the minimum ceiling heights needed for a 3- or 4-dwelling unit building:

Room / Space	Required Minimum Height (m) (1)
Living area or space, dining room or space, kitchen or kitchen space	2 300 mm over at least 75% of the required floor area with clear height of 2 100 mm at any point over the required area
Bedroom or Bedroom Space	2 300 mm over at least 50% of the required floor area or 2 100 mm over all of the required area. Any part of the floor having a clear height of less than 1 400 mm is not considered in computing the required floor area.

Room / Space	Required Minimum Height (m) [1]
Basement Recreational Space [2]	2 100 mm over at least 75% of the basement area. Clearance under beams and ducts is permitted to be reduced to 1 950 mm.
Bathroom, water closet, or laundry area above grade	2 100 mm in any area where a person would normally be in a standing position.
Passage, hall, or main entrance vestibule and finished rooms not mentioned above	2 100 mm
Garage	2 000 mm

(1) Area of the space is required to be measured at floor level
(2) Where a dwelling unit is located in a basement, the minimum ceiling heights for the rooms / spaces stated in this Table apply.
(3) Minimum ceiling heights and clear heights specified above are to be extended to the entry or entries to the rooms or spaces

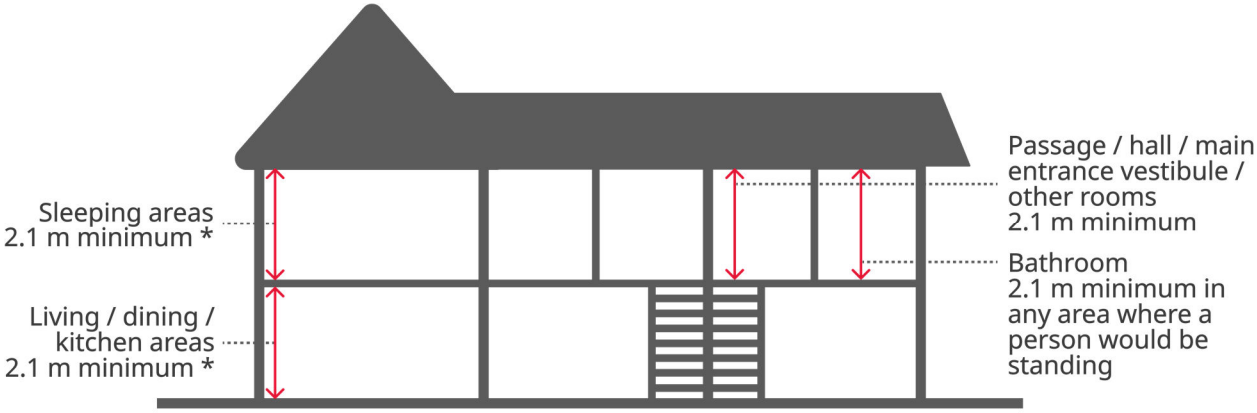

* See OBC Article 9.5.3.1

Buildings more than five (5) years old are allowed to have lower ceiling heights, as per Part 11 of the Ontario Building Code.

Door Sizes

Doors in dwelling units must have the minimum sizes shown in the table below:

Door Size	Minimum Width (mm)	Minimum Height (mm) (1)
Dwelling unit entrance (including common spaces), vestibule or entrance hall	810	1 980
Stair to a floor level that contains a finished space	810	1 980
All doors in at least one line of passage from the exterior to the basement	810	1 980
Utility Rooms	810	1 980
Walk-in Closet	610	1 980
Bathroom, water-closet room, shower room	610	1 980
Rooms located off hallways that are permitted to be 710 mm wide	610	1 980
Rooms not mentioned above, and exterior balconies	760	1 980

Subject to the layout of the building, barrier-free requirements may apply, refer to the "Barrier-Free Accessibility Considerations" section of this guide.

Natural Lighting

Some types of rooms need natural light and a view to the outdoors. The OBC requires minimum window glass areas in the rooms listed below.

Room / Space	< 5 Years Old (Part 9 Requirements)		> 5 Years Old (Part 11 Requirement)
	Minimum Unobstructed Glass Area with No Electric Lighting	Minimum Unobstructed Glass Area with Electric Lighting	
Laundry, basement recreation room, unfinished basement	4% of area served	Windows not required	(1)
Water-closet room	0.37 m^2	Windows not required	(1)
Kitchen (including kitchen space, and alcove)	10% of area served	Windows not required	(1)
Living rooms and dining rooms	10% of area served		(1)
Bedrooms and other finished rooms not mentioned above	5% of area served (2)		(1)

(1) Where windows are not used as a means and egress and do not conflict with ventilation requirements, the minimum glasses areas provided in Part 9 (as noted in the table) can be reduced by 50%.

(2) Refer to Exiting and Egress Section of this guide for additional window area requirements.

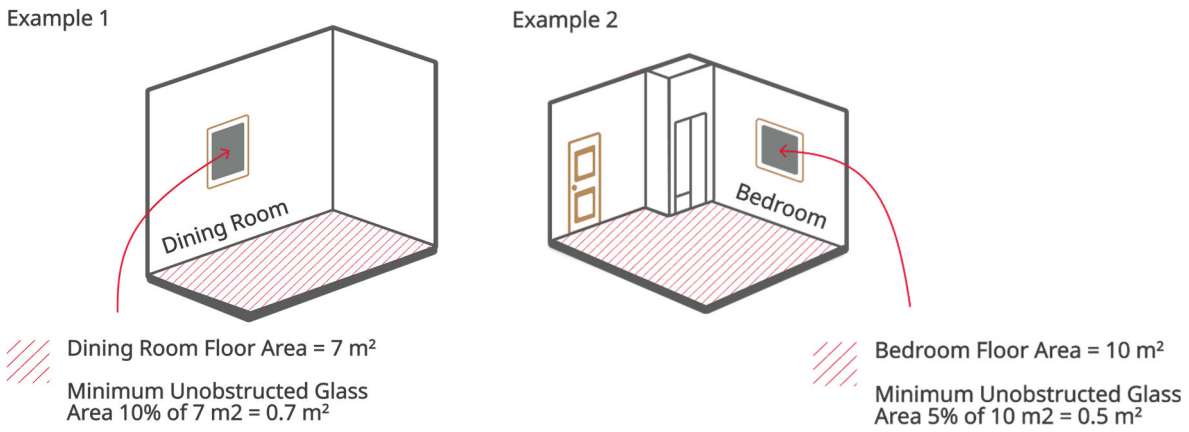

Spatial Separation

The OBC has rules for spatial separation and limiting distance. This helps stop fires from spreading beyond the building of origin. The closer buildings are to a property line or another building on the same property, the fewer windows or doors are allowed on that side.

For 3- or 4-dwelling unit buildings, the rules about how much space is needed are found in Subsection 9.10.14 of the OBC.

Thermal Insulation

Where additions are proposed, all walls, ceilings and floor separating a heated space from an unheated space (e.g., between the building and the garage), exterior air or exterior soil, is required to be provided with thermal insulation to prevent moisture condensation and improve occupant comfort. The Building Code outlines minimum energy efficiency requirements for the building in Supplementary Standard SB-12.

The insulation provided in fire-rated assemblies should be noncombustible mineral wool.

HVAC Requirements and Restrictions

The OBC has requirements in Part 9 and Part 6 outlining HVAC requirements and restrictions.

Ventilation of rooms and spaces in residential occupancies are required to conform to Section 9.32 of the OBC.

Heating and air-conditioning for heating systems and air-conditioning systems serving only one dwelling unit is required to conform to Section 9.33 of the OBC. The design and installation of other types of heating systems is required to conform to Part 6 of the OBC.

Buildings more than five (5) years old are allowed to share a furnace under certain conditions, as per Part 11 of the Ontario Building Code.

Plumbing Facilities

OBC Section 9.31 outlines requirements for plumbing facilities within dwelling units. Each dwelling unit must have:

- Kitchen sink
- Lavatory
- Bathtub / shower
- Water closet, and
- Access to Laundry facilities.

Each dwelling unit is required to have its own water shut-off valve. This makes sure that if you turn off the water to one unit, it won't stop the water to other units.

If your property is in a flood prone zone you will need to provide backwater valves for each dwelling unit. For more information, see Builder Tip No. 108 available at www.markham.ca/building.

Installation of plumbing facilities and compliance with the OBC will need to be conducted by a qualified plumber.

Most properties in Markham have municipal water and sewer services. If you are adding dwelling units, the water and sewer services must be the right size. It is important to make sure that the water service entering your property is big enough to handle the fixtures in the main house and the new coach house or garden home.

If your property has a septic system, it may need upgrades for a 3- or 4-dwelling unit building.

Electrical Facilities and Lighting

Every entrance is required to be provided with exterior lighting outlet with fixture controlled by a wall switch located within the building. Where the building entrance serves multiple dwelling units, the exterior lighting outlet can be controlled by a wall switch or panel accessible to authorized personnel.

The OBC requires that a lighting outlet with a fixture controlled by wall switches be provided in kitchens, bedrooms, living rooms, utility rooms, laundry rooms, dining rooms, bathrooms, vestibules, hallways, storage rooms, garage, and public or service area.

Stairways with more than 4 risers are required to be lighted with 3-way wall switches located at the top and bottom of the stair.

In addition, emergency lighting is required for shared exits.

The Ontario Electrical Safety Code has further requirements when converting your house into a 3- or 4-dwelling unit building. Electrical service to and into the building is to be sized appropriately.

Barrier-free Accessibility Considerations

Certain buildings must be designed with barrier-free accessibility to assist persons using manual mobility assistance devices such as wheelchairs and walking aids (e.g., canes, crutches, braces, and artificial limbs) or people with sensory disabilities.

If a house is converted into four dwelling units and there are shared elements, the building must follow the barrier-free accessibility rules in Section 3.8 of the Ontario Building Code. This will affect the entrances to the building, common areas and at least one of the dwelling unit(s).

How to Apply

Building Permit Requirements

The conversion of a house to a 3- or 4-dwelling unit building must follow the rules in the Ontario Building Code and needs a building permit. After construction is complete, the dwelling units are required to be registered with the Markham Fire and Emergency Services. These requirements are intended to make sure it is safe, legal and livable.

What You Need to Apply for a Building Permit

You must apply online at eplanportal.markham.ca/. What you need to submit depends on where the building is located, the type of services on the lot, and whether the building is new or being renovated. There are four main parts to every building permit application:

1. Application Forms
2. Documents
3. Construction drawings
4. Permit Fees

A comprehensive list of the required drawings, documents and forms can be found online at markham.ca/economic-development-business/building-permits/guide-building-permits

Who Can Prepare the Drawings?

The size of the building will determine who can prepare the drawings.

If the building is greater than 600 m^2 in gross area and contains a dwelling unit above another dwelling unit, a licensed Architect is required.

For a building less than 600 m^2 in gross area, drawings for the permit can be made by:

- A registered designer with a Building Code Identification Number (BCIN) qualified in Small Buildings and Building Services
- A licensed Architect
- A Professional Engineer

Building Inspections

Why Inspections Matter

Inspections make sure your project follows the Ontario Building Code and the City of Markham's by-laws. This keeps people safe and protects your home's value.

When Inspections Happen

Here are the main times that inspections are needed:

- **Footings/Foundation** (if applicable): Required for new foundations or basement walkouts.
- **Framing**: After the structure is built but before insulation or drywall.
- **Plumbing and Mechanical Rough-In**: Before the pipes and systems are covered up.
- **Insulation and Vapour Barrier**: After insulation is added but before drywall.
- **Fire Separations and Fire Stopping** (if applicable): To check fire-rated walls and ceilings and the sealing around penetrations.
- **Occupancy/Completion**: When the work is finished and the unit is ready for occupancy.

How to Book an Inspection

Book inspections at least 24 hours ahead using via the **ePLAN portal**. You will need your Building Permit Number, site address and inspection details.

What Happens During an Inspection

If the work complies, the Building Inspector will approve the stage and you can move to the next step. If corrections are needed, the inspector will issue a Field Inspection Report. You must make the corrections and get it re-inspected before moving on.

Final Approval and Occupancy

After passing the Occupancy/Completion Inspection, your project is approved and your building permit is closed.

Helpful Tips

- Keep your Building Permit and approved plans on-site for inspections.
- Coordinate with your contractor to ensure inspections are ready.
- Keep copies of all inspection reports.

For more details about 3- or 4-dwelling unit building and the inspection process, please contact Building Standards – Inspection Services at 905.475.4858 extension 2189.

Registration

All 3- or 4-dwelling unit buildings must be registered with Markham Fire and Emergency Services. This means the building in its entirety must be checked by Fire and Emergency Services staff. There is a fee for this inspection and registration.

To register, you must allow the inspectors to see all parts of the building and provide the following:

- Proof of insurance that covers the entire building
- A general electrical inspection report
- Smoke and carbon monoxide (CO) alarms on every level — they must not be expired, must be in the correct locations, and must have the correct power source
- A check of the kitchen stove and dryer exhaust ducts to make sure they use semi-rigid or smooth metal connections
- A check of the wall and door between the garage and the dwelling unit — the door must close by itself and latch properly
- A check of the fire department access to the building

After you provide all the documents and fix any problems found during the inspection, Markham Fire and Emergency Services will give you a letter to show your building is registered.

For more information, contact Markham Fire & Emergency Services.

Contact Us

Additional Residential Units

This guide was produced by the City of Markham. If you have any questions or comments, please contact us at BuildingARUs@markham.ca

Permit Application Status

Building Permit Administration
905.475.4870
buildingstandards@markham.ca

Building Inspections

Building Inspections
905.475.4858 extension 2189
bins@markham.ca

Registration

Markham Fire & Emergency Services
905.415.7521
Fire-PreventionChiefs@markham.ca